American National Standard

for Information Systems —

Data Format for the Interchange of Fingerprint, Facial, & Other Biometric Information – Part 1

Approved 04/20/2007

American National Standards Institute, Inc.

This document is a contribution of the National Institute of Standards and Technology and is not subject to copyright. Any organization interested in reproducing ANSI/NIST-ITL 1-2007 Data Format for the Interchange of Fingerprint, Facial, & Other Biometric Information – Part 1 is free to do so. However there shall be no alteration to any of the material contained in the document. NIST retains the sole right to submit this standard to any other forum for any purpose.

Certain commercial entities, equipment, or materials may be identified in this document to assign field numbers to registered vendors or to describe a procedure or concept adequately. Such identification is not intended to imply recommendation or endorsement by the National Institute of Standards and Technology, nor is it intended to imply that the entities, materials, or equipment are necessarily the best available for the purpose.

Contents

Foreword ……..vii

1 Introduction 1

2 Scope, purpose, and conformance 1

2.1 Scope 1

2.2 Purpose 2

2.3 Conformance 2

3 Normative References 2

4 Definitions 4

5 Transmitted data conventions 6

5.1 Fingerprint Ridge Representation 6

5.2 Byte and bit ordering 6

5.3 Grayscale data 6

5.4 Binary data 7

5.5 Color data 7

5.6 Compression algorithms 7

5.7 Color spaces 9

5.8 Scan sequence 10

6 Image resolution requirements 11

6.1 Scanner resolution requirement 11

6.2 Transmitting resolution requirement 12

7 File description 12

7.1 File format 13

7.2 File contents 14

7.3 Implementation domains 14

7.4 Image designation character (IDC) 15

8 Record description 16

8.1 Logical record types 16

8.2 Record format 20

9 Type-1 transaction information record 23

9.1 Fields for Type-1 transaction information record 23

9.2 End of transaction information record Type-1 28

10 Type-2 user-defined descriptive text record 28

10.1 Fields for Type-2 logical records 28

10.2 End of Type-2 user-defined descriptive text record 28

10.3 Additional user-defined descriptive text records 28

11 Type-3 through Type-6 fingerprint image records 29

11.1 General 29

11.2 Types 3-6 logical record field descriptions 29

11.3 End of fixed-resolution fingerprint image record 32

11.4 Additional fixed-resolution fingerprint image records 32

12 Type-7 user-defined image record 32

12.1 Fields for Type-7 logical record 33

12.2 End of Type-7 user-defined image record 33

12.3 Additional user-defined image records 33

13 Type-8 signature image record 34

13.1 Fields for Type-8 logical record 34

13.2 End of Type-8 signature image record 36

13.3 Additional signature 36

14 Type-9 minutiae data record 36

14.1 Minutiae and other information descriptors (Standard Format) 37

14.2 Fields for Type-9 logical record (Standard Format) 39

14.3 End of Type-9 logical record 43

14.4 Additional minutiae records 43

15 Type-10 facial & SMT image record 43

15.1 Fields for Type-10 logical record ... 43

15.2 End of Type-10 logical record ... 63

15.3 Additional facial & SMT image records ... 63

16 Type-11 record reserved for future use ... 63

17 Type-12 record reserved for future use ... 63

18 Type-13 variable-resolution latent image record ... 63

18.1 Fields for the Type-13 logical record ... 64

18.2 End of Type-13 variable-resolution latent image record ... 70

18.3 Additional variable-resolution latent image records ... 70

19 Type-14 variable-resolution fingerprint image record ... 70

19.1 Fields for the Type-14 logical record ... 71

19.2 End of Type-14 variable-resolution fingerprint image record ... 78

19.3 Additional variable-resolution fingerprint image records ... 78

20 Type-15 variable-resolution palmprint image record ... 79

20.1 Fields for the Type-15 logical record ... 79

20.2 End of Type-15 variable-resolution palmprint image record ... 85

20.3 Additional Type-15 variable-resolution palmprint image records ... 85

21 Type-16 user-defined testing image record ... 85

21.1 Fields for the Type-16 logical record ... 85

21.2 End of Type-16 user-defined testing image record ... 90

21.3 Additional Type-16 user-defined testing image records ... 90

22 Type-17 Iris image record ... 90

22.1 General ... 90

22.2 Fields for the Type-17 logical record ... 90

22.3 End of Type-17 Iris Data Record ... 96

22.4 Additional Type-17 Iris Data Records ... 96

23 Type-99 CBEFF biometric data record ... 97

23.1 Fields for the Type-99 logical record ... 97

23.2 End of Type-99 CBEFF Data Record 101

23.3 Additional Type-99 CBEFF Data Records 101

24 Another individual 101

Annex A 7-bit American Standard Code for Information Interchange (ASCII) 102

Annex B Use of information separator characters 103

Annex C Base-64 encoding scheme 104

Annex D JPEG file interchange format 106

Annex E NCIC Codes for Scars, marks, tattoos, and other characteristics 113

Annex F Example transaction 124

Annex G INCITS / M1 378 Minutiae Format 132

Annex H Best Practice Application Level 30 137

Annex I Best Practice Image Capture Requirements for SAP Levels 40, 50, and 51 140

Annex J Face-Pose Values 147

Annex K Bibliography 150

Figures

Figure 1 Byte and bit ordering 6

Figure 2 Order of scanned image 11

Figure 3 Minutiae coordinate system 39

Figure 4 Examples of resolution for levels 30, 40, & 50/51 50

Figure 5 Feature point codes defined in ISO/IEC 14496-2 58

Figure 6 Eye and nostril center feature points 59

Figure 7 Entire joint image 68

Tables

Table 1 Grayscale & color image compression codes 7

Table 2 Binary compression codes 9

Table 3 Color spaces 9

Table 4 Logical record types 13

Table 5 Number of logical records per transaction 15

Table 6 Resolution of Transmitted fingerprint image records 17

Table 7 Information separators 21

Table 8 Type-1 Transaction information record layout 24

Table 9 Directory of character sets 27

Table 10 Type 3-6 record layout 29

Table 11 Finger & palm impression types 30

Table 12 Finger position code & maximum image dimensions 31

Table 13 Type-8 record layout 34

Table 14 Registered vendor minutiae blocks 37

Table 15 Minutiae types 37

Table 16 Pattern classification 41

Table 17 Type-10 facial and SMT record layout 44

Table 18 Subject acquisition profiles 47

Table 19 Subject pose 51

Table 20 Photo descriptors 51

Table 21 Acquisition source type codes 52

Table 22 Subject facial description codes 54

Table 23 Eye color codes 55

Table 24 Hair color codes 55

Table 25 Subject feature point field 56

Table 26 Eye and nostril center feature point codes 57

Table 27 Device monitoring modes 57

Table 28 Tattoo classes 60

Table 29 Tattoo subclasses 60

Table 30 Color codes 62

Table 31 Type-13 Variable-resolution latent record layout 65

Table 32 EJI and tip codes 67

Table 33 Type-14 Variable-resolution fingerprint record layout 71

Table 34 Type-15 Variable-resolution palmprint record layout 80

Table 35 Palm codes and dimensions 84

Table 36 Type-16 Variable-resolution user-defined testing image record layout 86

Table 37 Type-17 Iris image record layout 91

Table 38 Type-99 CBEFF biometric data record layout 98

Table 39 CBEFF Biometric type 99

Foreword (This foreword is not part of American National Standard ANSI/NIST-ITL 1-2007)

Various levels of law enforcement and related criminal justice agencies as well as identity management organizations procure equipment and systems intended to facilitate the determination of the personal identity of a subject from fingerprint, palm, facial (mugshot), or other biometric information (including iris data). To effectively exchange identification data across jurisdictional lines or between dissimilar systems made by different manufacturers, a standard is needed to specify a common format for the data exchange. To this end, this standard has been developed.

Fingerprint and palmprint images are acquired from flatbed scanners, Automated Fingerprint Identification Systems (AFIS), live-scan fingerprint and palmprint readers, and/or image storage and retrieval systems. An AFIS scans and stores the digital representations of fingerprint and palmprint images that are captured from inked cards, chemical cards, or live-scan readers that acquire the fingerprint and palmprint image data directly from the subject's fingers and hands. The scanned images are then processed to extract specific types of features from the images.

Sources used for the electronic capture of a subject's facial image (mugshot) and scars, marks, and tattoos (SMTs) present include digital still and video cameras and other types of video recorders that capture images and produce digital image files directly from the subject's head and body. Scanners are used to digitize images from photographs, pictures, or sketches. The digital representations of these images consist of grayscale or color pixels depending on the application and equipment.

These digital images may be stored in a compressed or uncompressed form in an image storage and retrieval system together with textual descriptive data and other information for each image. When required, specific images stored on a file can be retrieved from storage and be incorporated as part of an electronic mugshot book, or an electronic line-up. Images selected may be the result of textual filters based on physical descriptive or information fields associated with each image. Stored SMT images can also be retrieved as part of an identification process.

Features from the scanned fingerprint, palmprint, facial, or other biometric images can be compared against a masterfile containing features extracted from previously scanned images. The result of these comparisons is a list of potential candidate identifications. A human examiner, using images retrieved from the system or fingerprint cards, then can identify a subject.

The Information Technology Laboratory (ITL) of the National Institute of Standards and Technology (NIST) sponsored the development of this American National Standards Institute (ANSI) approved American National Standard using the NIST Canvass Method to demonstrate evidence of consensus. This updated standard replaces ANSI/NIST-ITL 1-2000 that address the interchange of fingerprint, facial, and SMT data.

The document that follows is the conventional ANSI/NIST standard, now known as Part 1. Part 2 will be the XML version of Part 1 and is currently being developed.

Part 1 of this standard includes eleven annexes. Annex A is normative and contains the 7-bit American Standard Code for Information Interchange (ASCII). Annex B is informational and illustrates the use of the information separator characters. Annex C is normative and describes the base-64 encoding scheme. Annex D, a description of the Joint Photographic Experts Group (JPEG) File Interchange Format (JFIF), is normative and considered part of the standard. Annex E is normative and contains the current version's (December 2000) codes from the NCIC Code Manual for describing the body locations of Scars, Marks, and Tattoos. Annex F is a comprehensive example of a transaction file containing several logical record types. The image exchange records contained in Annex F are formatted in accordance with this standard and are

informative and not considered as part of the standard. Annex G is informative and contains the INCITS/M1 378 minutiae format specifications. Informative Annexes H and I contain best practices for mugshots for application levels 30 through 51, respectively. Annex J is also informative and contains various examples of face-pose value combinations. Annex K is a bibliography of informative references.

Over the past several years, many data interchange and processing applications have converted to or are in the process of migrating toward an XML format approach for processing data. In order to provide the ability to directly interface with such applications, an XML alternative representation of the textual, image, and other biometric information is being developed. Part 2 of this standard will contain the XML alternative for the conventional ANSI/NIST standard. The goal of Part 2 will be to describe a "one-to-one" correspondence of XML elements to the numerically tagged conventional elements described in Part 1. The subelements (separated by the *US* and *RS* characters in the conventional representation) are given XML counterparts in Part 2.

Suggestions for the improvement of this standard are welcome. They should be sent to the attention of R. M. McCabe, Fingerprint Standards, Information Access Division, Image Processing Group, NIST, 100 Bureau Dr, Mail Stop 8940, Gaithersburg, MD 20899-8940.

The following organizations, recognized as having an interest in the standardization of the data format for the interchange of fingerprint, facial, SMT, and other biometric information, were contacted prior to the approval of this revision of the standard. Inclusion in this list does not necessarily imply that the organization concurred with the submittal of the proposed standard to ANSI.

Arkansas State Police, AFIS/1D Bureau	Cora Gentry Terri Smith (Alt.)
Aware, Inc.	Robert Mungovan
BAE Systems Information Technology	Brian Finegold
BIO-KEY International	Charles Yanak
Biometric Information Mgmt	Michael Powers
BSI 2000, Inc.	Kevin Wilson
Bundeskriminalamt	Gerd Hardt Christopher Schiel (Alt.)
BWXT Y-12	Edmon Begoli Mark Patterson (Alt.)
Cherry Biometrics	Michael Cherry
Cogent Systems, Inc.	Anne Wang
Comnetix, Inc.	Henri Schueler
Cross Match Technologies	Greg Cannon Ralph Lessmann (Alt.)
Daon	Matt Swayze
Dataworks Plus	Rick Johnson Todd Pastorini (Alt.)
Delaware State Police	Russell McNatt
Department of Homeland Security	Brad Wing
DOJ/National Institute of Justice	Christopher Miles

FBI/CJIS	Tom Hopper John Manzo (Alt.) B. Scott Swann (Alt.) Patrice Yuh (Alt.)
FBI/Lab	Stephen Meagher
Foray Technologies	David Witzke
Higgins-Hermansen Group, LLC	Peter Higgins Kathleen Higgins (Alt.)
IAI AFIS Committee, Chair	Peter Komarinski
ID Networks, Inc.	Doug Blenman, II
ID Technology Partners, Inc.	Mark Jerde M. Paul Collier (Alt.) Tom Greiner (Alt.)
International Biometric Group (IBG)	Brian Wong
King County Sheriff's Office	Marilyn Nault
L-1 Identity Solutions	Brian Martin Kirsten Nobel (Alt.)
Lockheed Martin	David Hagan Scott Rogers (Alt.)
Los Angeles Co. Sheriff's Dept.	Beatriz Calderon T.J. Smith (Alt.)
Mentalix, Inc.	Dale Remmers
MN Bureau of Criminal Apprehension	Jerry Olson
Motorola	Artour Karaguiozian Guy Cardwell (Alt.)
MTG Management Consultants	Charles Collins Terrance Gough (Alt.)
National Background Data LLC/ First Advantage	Robert Holloran
NEC Corporation of America	Stephen Dunbar Scott Murdock (Alt.) M. Joe Notani (Alt.)
Netherlands National Police Agency	Bastiaan Zetstra
NIST	Michael Garris Elaine Newton (Alt.) Stan Janet, Jr. (Alt.)
Noblis	Austin Hicklin John Mayer-Splain (Alt.)
Nortel PEC Solutions, Inc	Benjamin McDowell
NYS Div. of Criminal Justice Services	Nancy Campbell Mary Ann Pelletier (Alt.)
OIPC Interpol	Mark Branchflower
OK State Bureau of Investigation	Ben Gherezgiher

Police I.T. Organization	Geoff Whitaker John Flahive (Alt.)
Raytheon	Teddy Ko
Royal Canadian Mounted Police	Mark Labonte
Saber	Bonny Scheier
Sagem Morpho, Inc.	Glen McNeil
Schenk Consultants, Inc.	Manfred Schenk
SEARCH	Catherine Plummer
SPEX Forensics	James Kearney George Setola (Alt.)
Steria	JR Vanden Eynde
TBS North America, Inc.	William Long
Texas Department of Public Safety	Mike Lesko
Toronto Police Service	Newton Phoon
Transport Canada	John Ouellette
United States Army Biometrics Task Force	Dale Hapeman Arun Vemury (Alt.)
vIDentity Systems, Inc.	Alan Viars
Virginia State Police	Julianna Wilson
WI Dept. of Justice	Gerry Coleman

1 Introduction

The first version of this standard, ANSI/NBS-ICST 1-1986, was published by NIST (formerly the National Bureau of Standards) in 1986. It was a minutiae-based standard that required a minimum amount of memory for the exchange and storage of fingerprint information.

In 1993 an updated version of the "Data Format for the Interchange of Fingerprint Information" standard (ANSI/NIST-CSL 1-1993) was approved by ANSI. While retaining the provision for minutiae data, the standard focused on formats for the exchange of fingerprint images rather than processed minutiae data.

In 1997 an addendum was approved to provide for the interchange of facial ("mugshot") image data and captured image data from scars, marks, and tattoos. The addendum carried the ANSI designation of ANSI/NIST-ITL 1a-1997.

A workshop convened in 1998 to review the standard and its addendum. This resulted in a new revision that merged the two documents, emphasized the tagged-field record, and introduced new record types for the exchange of recorded fingerprint, latent, and palm print images. The revision was titled “Data Format for the Interchange of Fingerprint, Facial, & Scar Mark & Tattoo (SMT) Information” and carried the ANSI designation of ANSI/NIST-ITL 1-2000.

This current version of the standard is the result of agreements reached during two workshops held in April and December of 2005 to review the ANSI/NIST-ITL 1-2000 standard. During the first workshop, proposals to update the standard were introduced. The proposals were refined and presented for discussion and approval during the second workshop. The major enhancements in this revision include:

- Image quality and segmentation data to support the processing of the "flat" images
- Definition of a new block of minutiae fields to harmonize with the INCITS M1 minutiae standard
- Best practice application levels for the capture of facial images
- A new record type for the exchange of iris information
- A new record type to contain biometric information not described in this standard but conformant to other registered biometric data format standards; and
- An XML alternative representation for this standard.

2 Scope, purpose, and conformance

2.1 Scope

This standard defines the content, format, and units of measurement for the exchange of fingerprint, palmprint, facial/mugshot, scar mark & tattoo (SMT), iris, and other biometric sample information that may be used in the identification or verification process of a subject. The information consists of a variety of mandatory and optional items, including scanning parameters, related descriptive and record data, digitized fingerprint information, and compressed or

uncompressed images. This information is primarily intended for interchange among criminal justice administrations or organizations that rely on automated fingerprint and palmprint identification systems, or use facial/mugshot, SMT, iris, or other biometric data for identification purposes.

This standard does not define the characteristics of the software that shall be required to format the textual information or to compress and reconstruct the associated digital fingerprint image information. Typical applications for this software might include, but are not limited to, computer systems associated with a live-scan fingerprinting system, a workstation that is connected to or is part of an Automated Fingerprint Identification System (AFIS), or an image storage and retrieval system containing fingerprints, facial/mugshot, SMT, or other biometric images.

2.2 Purpose

Information compiled and formatted in accordance with this standard can be recorded on machine-readable media or may be transmitted by data communication facilities. This information may have been gathered directly from a fingerprint scanner or camera in lieu of a fingerprint card, a latent fingerprint, facial/mugshot, or other types of photographs. Law enforcement, criminal justice agencies, and other organizations that process biometric data will use the standard to exchange fingerprint, palmprint, facial, iris, or other photographic images and related biometric identification data.

2.3 Conformance

Systems claiming conformance with this standard shall implement the transmitting and/or receiving of record types as defined by this standard. Systems claiming conformance are not required to implement every record type specified herein. At a minimum, they must be capable of transmitting and receiving Type-1 records. However, in order for a transaction to be meaningful, there must be at least one additional type of record included. The implementer must document the record types supported in terms of transmitting and/or receiving. Those record types not implemented shall be ignored by the conforming system receiving a transaction.

3 Normative References

The following standards contain provisions that, through reference in this text, constitute provisions of this American National Standard. At the time of publication, the editions indicated were valid. All standards are subject to revision, and parties that utilize this American National Standard are encouraged to investigate the possibility of applying the most recent editions of the standards indicated below.

ANSI X3.4-1986 (R1992), Information Systems --- Coded Character Sets ---7-Bit American National Standard Code for Information Interchange (7-Bit ASCII).[1]

ANSI X3.172-1990, Information Systems --- Dictionary for Information Systems.

[1] ANSI X3 Documents available from the American National Standards Institute, 11 West 42nd Street, New York, NY 10036.

ANSI/EIA - 538-1988 Facsimile Coding Schemes and Coding Control Functions for Group 4 Facsimile Equipment.

ANSI/IAI 2-1988, Forensic Identification --- Automated Fingerprint Identification Systems --- Glossary of Terms and Acronyms.[2]

ANSI INCITS 378-2004, Finger Minutiae Format for Data Interchange.[3]

ANSI INCITS 398-2005, the Common Biometric Exchange Formats Framework (CBEFF)

ANSI/NIST-ITL 1-2000, Information systems – Data Format for the Interchange of Fingerprint, Facial, and Scar Mark & Tattoo (SMT) Information.[4]

IAFIS-DOC-0178-7.1 Electronic Fingerprint Transmission Specification, Version 7.1, May 2, 2005[5].

IAFIS-IC-0110 (V3) WSQ Gray-scale Fingerprint Image Compression Specification, December 19, 1997.

ISO 646-1983 7-Bit Coded Character Set for Information Interchange.[6]

ISO 8601-1988, Data Elements and Interchange Formats - Information Interchange Representation of Dates and Times.

ISO/IEC International Standard 10918-1, Information Technology - Digital Compression and Coding of Continuous-Tone Still Images Part 1: Requirements and Guidelines. This is commonly referred to as the JPEG (Joint Photographic Experts Group) algorithm.

ISO/IEC 14496-2, MPEG4 Feature Points, Annex C.

ISO/IEC International Standard 15444-1, JPEG 2000, Information Technology - Digital Compression and Coding of Continuous-Tone Still Images Part 1: Requirements and Guidelines.

MTR 04B0000022 (Mitre Technical Report), Margaret Lepley, *Profile for 1000ppi Fingerprint Compression*, Version 1.1, April 2004.[7] Available at:
http://www.mitre.org/work/tech_papers/tech_papers_04/lepley_fingerprint/lepley_fingerprint.pdf

National Crime Information Center (NCIC) Code Manual, Ninth Edition, December, 2000.

---

[2] Available from the International Association for Identification.

[3] All INCITS documents available from http://www.incits.org

[4] http://fingerprint.nist.gov/standard/index.html

[5] All CJIS, IAFIS, and NCIC documents available from Criminal Justice Information Services Division, Federal Bureau of Investigation 935 Pennsylvania Avenue, NW, Washington, DC 20535.

[6] All ISO documents available from the American National Standards Institute, 11 West 42nd Street, New York, NY 10036.

[7] http://www.mitre.org/work/tech_papers/tech_papers_04/lepley_fingerprint/lepley_fingerprint.pdf

NIST Fingerprint Image Quality (NFIQ), NISTIR 7151 ed., National Institute of Standards and Technology, 2004.[8] Available at:

http://fingerprint.nist.gov/NFIS/ir_7151.pdf

4 Definitions

The following definitions and those given in the American National Standard Automated Fingerprint Identification Systems --- Glossary of Terms and Acronyms, ANSI/IAI 2-1988, apply to this standard.

4.1 AAMVA

Abbreviation for the American Association of Motor Vehicle Administrators

4.2 ANSI

Abbreviation for the American National Standards Institute, Inc.

4.3 aspect ratio

The width-to-height ratio of the captured image.

4.4 complete friction ridge exemplars

See major case prints.

4.5 effective scanning resolution

The number of pixels per unit distance that remain after a captured image has been subsampled, scaled, or interpolated down to produce an image having a lower value of scanning resolution (fewer pixels per mm) than was used originally to capture the image.

4.6 Entire Joint Image

An exemplar image containing one rolled and three plain full finger views (full-length finger images) for a single finger.

4.7 FAP

Abbreviation Facial Animation Parameters

4.8 IBIA

Abbreviation for International Biometric Industry Association

4.9 ICC

Abbreviation for International Color Consortium.

4.10 logical record

A record independent of its physical environment; portions of one logical record may be located in different physical records, or several logical records or parts of logical records may be located in one physical record.

[8] Also see: E. Tabassi, “A novel approach to fingerprint image quality” in IEEE International Conference on Image Processing ICIP-05, Genoa, Italy, September 2005.

4.11 major case prints

A set of exemplar images of all finger and palm friction skin for an individual. Major case prints include full palm print images, as well as rolled fingerprints, plain fingerprints, entire joint images, and rolled tips for all fingers. They are also known as complete friction ridge exemplars. (Note that the term Major Case Prints may be deprecated for some uses because in legal contexts it can be incorrectly read as making an implication regarding the severity of the case.)

4.12 minutia

The point where a friction ridge begins, terminates, or splits into two or more ridges. Minutiae are friction ridge characteristics that are used to individualize a fingerprint image.

4.13 mugshot

Term used interchangeably with facial image. The term facial image usually implies a higher quality image than a mugshot.

4.14 native scanning resolution

The nominal scanning resolution used by a specific AFIS, live-scan reader, or other image capture device and supported by the originator of the transmission.

4.15 nominal transmitting resolution

The nominal number of pixels per unit distance (ppmm or ppi) of the transmitted image. The transmitting resolution may be the same as the scanning resolution for a particular image. On the other hand, the transmitting resolution may be less than the scanning resolution if the scanned image was subsampled, scaled, or interpolated down before transmission.

4.16 NFIQ

Abbreviation for NIST Fingerprint Image Quality.

4.17 ppi

Abbreviation for pixels per inch

4.18 ppmm

Abbreviation for pixels per millimeter

4.19 RGB

Red, Green, Blue used to represent color pixels comprised of a specified number of bits to represent each of these primary color components.

4.20 ROI

Abbreviation for region of interest.

4.21 SMT

Abbreviation used for scar, mark, and tattoo information.

4.22 scanning resolution

The number of pixels per unit distance at which an image is captured (ppmm or ppi).

4.23 tagged-field record

A logical record containing unique ASCII field identifiers for variable-length data fields that is capable of being parsed based on the field identifier and the data contents of each field.

4.24 transaction

A command, message, or an input record that explicitly or implicitly calls for a processing action. Information contained in a transaction shall be applicable to a single subject.

5 Transmitted data conventions

5.1 Fingerprint Ridge Representation

Ridges in fingerprint images shall be represented as “dark ridges” in either grayscale or binary image data.

5.2 Byte and bit ordering

Each information item, subfield, field, and logical record shall contain one or more bytes of data. Within a file, the order for transmission of both the ASCII and the binary representations of bytes shall be most significant byte first and least significant byte last otherwise referred to as Big-Endian format. Within a byte, the order of transmission shall be the most significant bit first and the least significant bit last. Figure 1 illustrates the order of transmission of the bytes and bits within a file.

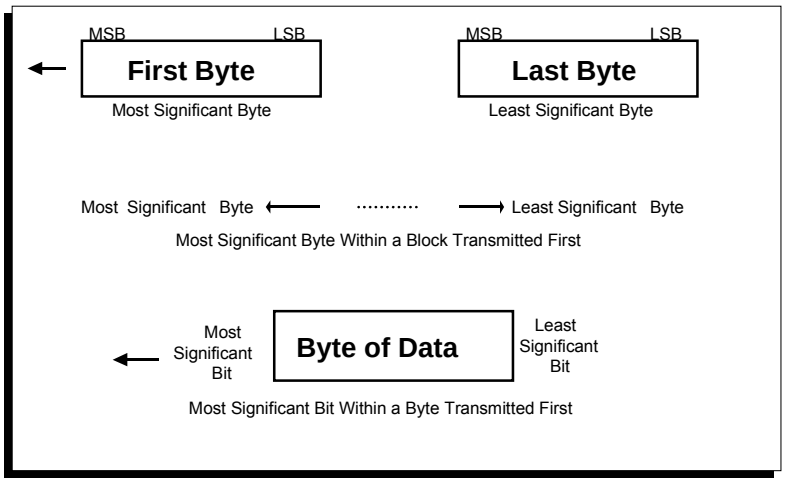

Figure 1 Byte and bit ordering

5.3 Grayscale data

Depending on the record type, grayscale image data may be transmitted in either compressed or uncompressed form. The transmission of uncompressed grayscale images shall consist of pixels, each of which shall normally be quantized to eight bits (256 gray levels) and held in a single unsigned byte. Increased precision for pixel values greater than 255 shall use two unsigned bytes to hold sixteen-bit pixels with values in the range of 0-65635. For grayscale data, a true black pixel shall be represented by a zero. A true white pixel shall have all of its bits of precision set to “1”. Therefore, true white pixels quantized to eight bits shall have a value of “255”, while a value of “1023” shall be used for pixels quantized to ten bits. As explained in 5.2, grayscale values requiring less than 8 or 16 bits are expressed as one or two bytes, right justified and zero padded on the left.

The transmission of compressed grayscale images shall be the output of the appropriate grayscale compression algorithm specified. Upon reconstruction of a compressed image the grayscale value for each pixel shall be the same (for lossless algorithms) or nearly the same (for lossy algorithms) as pixels in an uncompressed image.

5.4 Binary data

Binary image data may be transmitted in either compressed or uncompressed form. The transmission of uncompressed binary images shall consist of pixels, each of which shall be quantized to one of two levels (binary representation). A value of zero shall be used to represent a white pixel and a value of one shall be used to represent a black pixel. For transmission of uncompressed binary images, eight pixels shall be left justified and packed into a single unsigned byte. The most significant bit of the byte shall be the first of the eight pixels scanned.

5.5 Color data

It is assumed that the scanned images consist of nominal 24 to 48-bit RGB pixels for color facial, SMT, iris, or user-defined testing images. Color image data may be transmitted in either compressed or uncompressed form. The transmission of uncompressed color images shall consist of RGB pixels, each component of which shall be quantized to at least 256 levels (8 bits). For each pixel, the three components shall be sequentially formatted for transmission on a pixel-by-pixel basis.

5.6 Compression algorithms

5.6.1 Color and grayscale compression algorithms

Compressed image data shall adhere to the requirements of the algorithm used. Table 1 lists the binary (shown here in base 10) and ASCII codes to be used for the available compression methods for encoding grayscale and color images described by this standard. But the choice of compression algorithms is limited by the type of data being exchanged (fingerprint, face, etc.). The description for each type of data exchange lists the legitimate compression algorithms that can be used for that type and whether a binary or ASCII code should be used.

Table 1 Grayscale & color image compression codes

Algorithm Name	Binary Code (in base 10)	ASCII Code
Uncompressed	0	NONE
WSQ Version 2.0	1	WSQ20
JPEG ISO/IEC 10918 (Lossy)	2	JPEGB
JPEG ISO/IEC 10918 (Lossless)	3	JPEGL
JPEG 2000 ISO/IEC 15444-1 (Lossy)	4	JP2
JPEG 2000 ISO/IEC 15444-1 (Lossless)	5	JP2L
Portable Network Graphics	6	PNG

The *"JPEGB"* algorithm indicates that the scanned or captured image was compressed using baseline JPEG. An entry of *"JPEGL"* indicates that the lossless mode of the JPEG algorithm was used to compress the image. If the image is captured in grayscale, then only the luminance component will be compressed and transmitted. For JPEG, the data shall be formatted in accordance with the JPEG File Interchange Format, Version 1.02 (JFIF)[9] as found in Annex D.[10]

An entry of *"JP2"* indicates that the scanned or captured image was compressed using lossy JPEG 2000. (Conformance with ISO 15444-1 is provided through part 4 of the standard, ISO 15444-4 "Conformance Testing".) An entry of *"JP2L"* indicates that the lossless mode of the JPEG 2000 algorithm was used to compress the image. For JPEG 2000, the data shall be formatted in conformance with JP2 format as described in ISO 15444-1.

Where JPEG 2000 is used for the compression of fingerprint images, specification/options contained in *Profile for 1000ppi Fingerprint Compression* (as listed in Section 3, Normative References) shall apply. This reference addresses the 9 quality layers between 0.015 bpp and 0.55 bpp.

Where JPEG 2000 is used for compression of facial images, the following conditions shall apply:

- Filters: The 9-7 irreversible filters described in ISO 15444-1 should be used for lossy mode; however for handheld devices (fixed point processors), the 5-3 reversible filters may be used instead. The 5-3 reversible filters shall be used for lossless mode. A conformant decoder shall be able to decode code streams created through both filters.

- Number of resolution levels: The image shall be encoded using enough resolution levels to ensure that a thumbnail with max(width, height) <= 64 is available in the image. Example: a 640x480 image shall be encoded with 5 resolution levels, which enables sub-resolution decodes of 320x240, 160x120, 80x60, and 40x30.

- Resolution as the dominant progression: JPEG 2000 allows five progression orders - LRCP, RLCP, RPCL, PCRL and CPRL. The RLCP progression order (resolution, layer, component, position) shall be used since it best facilitates decode and display of lower resolution derivative images by remote networked devices. Through the RLPC progression order, the code stream shall be formatted so that the resolution information of the image is the first data made available to a decoder in a streaming mode of operation.

- Bits per Channel: The number of bits per channel for encoders and decoders shall be 8-16 bits.

- Single tile images: Facial images shall be encoded using only single tile to avoid tiling artifacts.

- JPEG 2000 quality layers: The image shall be encoded using at least 10 quality layers to enable quality progressive decoding or sub-quality image extraction.

Region of Interest (ROI) Encoding is allowed: This encoding method is a useful way to compress a facial image to a small size, while retaining sufficient image quality within the specified ROI to perform either human or automated identification.

---

[9] Developed by C-Cube Microsystems, 1778 McCarthy Blvd., Milpitas, CA 95035.

[10] Annex D specifies YCC as the standard color space to be used for JFIF. YCC is a linear combination of RGB components or channels. sRGB can be JPEG compressed and stored using JFIF, which is specified in Annex D.

5.6.2 Binary compression algorithms

Table 2 lists the binary codes for the available compression schemes that can be used for encoding binary image data described by this standard. This standard does not use ASCII codes for describing compression methods for the exchange of binary images.

Table 2 Binary compression codes

Algorithm Name	Binary Code	ASCII Code	Notes
Uncompressed	0	_____	Image Packed 8 pixels/byte
Facsimile ANSI/EIA 538-1988	1	_____	Lossless

The transmission of compressed binary images shall be the output of the binary compression algorithm specified by ANSI/EIA-538-1988. Upon decompression, each pixel with a value of zero shall be considered to be white and each pixel with a value of one shall be considered to be black.

5.7 Color spaces

Table 3 lists the codes and their descriptions for each of the available color spaces used within this standard. All other color spaces are to be marked as undefined.

Table 3 Color spaces

Code	Description
UNK	Undefined
GRAY	Grayscale (monochrome)
RGB	Undetermined color space for an RGB image
SRGB	sRGB (IEC 61966-2-1)
YCC	YCbCr (legacy)
SYCC	YCbCr (JPEG 2000 compressed)

5.7.1 Backwards compatibility

In previous versions of this standard, the term “color space” referred to device-dependent color information with a particular sequence and range for the three color channels. The choice was either RGB or an RGB-derivative space known as YCC. Neither space provides an objective definition of a particular color or relates to the way in which humans perceive color.

Although sRGB is the preferred color space for compressed images for this version, in the previous version of this standard, it was stated that “the preferred color space for compressed images using baseline JPEG and JFIF is YCbCr to be coded as ‘YCC’,” while the color space for uncompressed color images was to be labeled RGB. Therefore, for backwards compatibility purposes, new systems must accommodate JPEG images that have been labeled as using the

YCC color space. Specifically, systems conformant with this standard must accept an entry of YCC and interpret it as meaning a (device-dependent) RGB color space.

5.7.2 Color space sRGB

To ensure that color images exchanged between differing systems can be correctly displayed or printed, images should be converted to the device-independent color space, sRGB[11], before compression or transmission to another system. As defined by IEC 61966-2-1, sRGB is a non-linear display profile that accommodates the voltage-to-color response characteristics of most high quality CRT monitors. The colors of the red, green, and blue phosphors (primaries) and the white point setting of an sRGB-conformant monitor are specified in the IEC document.

The relationship between sRGB and a linear RGB space having the IEC-defined primaries and white point is as follows:

$$value_{sRGB} = \begin{cases} 12.92 value_{lin}, & \text{for } value_{lin} \le 0.0031308 \\ 1.055 value_{lin}^{(1/2.4)} - 0.055, & \text{for } value_{lin} > 0.0031308 \end{cases}$$

where $value_{lin}$ is an R, G, or B value in linear RGB space (with a range of 0 to 1) and $value_{sRGB}$ is the corresponding R, G, or B value in non-linear *sRGB* space (also with a range of 0 to 1). To convert from/to the range of 0 to 255, divide/multiply by 255.

Typically, modern digital cameras, desktop scanners, LCD monitors, and printers, although they don't inherently operate in sRGB space, are designed with circuitry or software to produce sRGB output or to accommodate sRGB as an input space. If an image acquisition device's color space is unknown, sRGB is usually a reasonable choice. If an acquisition device and its software cannot provide sRGB output, various color management products are available commercially that use its color profile, often available from its manufacturer, to convert images in its native color space to sRGB.

5.8 Scan sequence

Each color, grayscale, or binary image formatted in accordance with this standard shall appear to have been captured in an upright position and approximately centered horizontally in the field of view. The recorded image data shall appear to be the result of a scanning of a conventional inked impression of a fingerprint or photo of a face or iris. This is also equivalent to a live-scan capture of the finger, or a camera capture of a face or iris. The scanning sequence (and recorded data) shall appear to have been from left-to-right, progressing from top-to-bottom of the fingerprint, palm print, face, SMT, or iris. Figure 2 illustrates the recording order for the scanned fingerprint image.

For the purpose of describing the position of each pixel within an image to be exchanged, a pair of reference axes shall be used. The origin of the axes, pixel location (0,0), shall be located at the upper left-hand corner of each image. The x-coordinate (horizontal) position shall increase

[11] For information on sRGB, see http://www.w3.org/Graphics/Color/sRGB or many of the white papers available at http://www.color.org.

positively from the origin to the right side of the image. The y-coordinate (vertical) position shall increase positively from the origin to the bottom of the image.

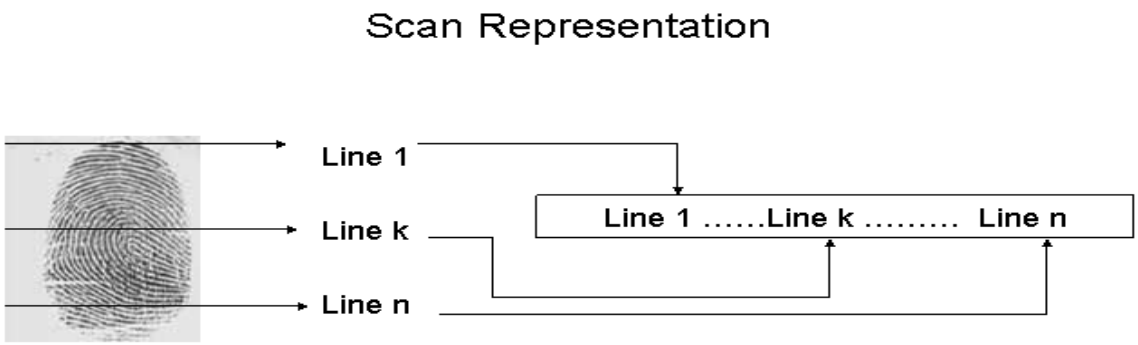

Figure 2 Order of scanned image

6 Image resolution requirements

Image resolution requirements are applicable to fingerprint, palmprint, and signature images. Facial/ mugshot, SMT, and iris images rely on the total number of pixels scanned and transmitted and are not dependent on the specific scanning resolution used.

6.1 Scanner resolution requirement

Binary and grayscale fingerprint images to be exchanged shall be captured by an AFIS, live-scan reader, or other image capture device operating at a specific native scanning resolution. The minimum scanning resolution for this capture process shall be 19.69 ppmm plus or minus 0.20 ppmm (500 ppi plus or minus 5 ppi). Scanning resolutions greater than this minimum value and with a device tolerance of plus or minus 1% may be used. Although a minimum scanning resolution is specified, a maximum value for scanning resolution is not specified by this standard**.**

However, for latents images, the minimum scanning resolution (or effective scanning resolution) and transmission rate for latent images shall be 39.37 ppmm plus or minus 0.40 ppmm (1000 ppi plus or minus 10 ppi).

The recommended migration path to higher scanning resolutions for image capturing devices with a native scanning resolution of 19.69 ppmm (500 ppi) shall be at a rate of 100% of the current native scanning resolution. The recommended migration path progresses from 19.69 ppmm to 39.37 ppmm (500 ppi to 1000 ppi), from 39.37 ppmm to 78.74 ppmm (1000 ppi to 2000 ppi), etc. Capture devices with native scanning resolutions not in step with this migration path shall provide (through subsampling, scaling, or interpolating downward) an effective scanning resolution that matches the next lower interval in the migration path. For example a device with native scanning resolution of 47.24 ppmm (1200 ppi) shall be required to provide an effective resolution of 39.37 ppmm (1000 ppi).

6.2 Transmitting resolution requirement

Each image to be exchanged shall have a specific resolution associated with the transmitted data. This transmitting resolution does not have to be the same as the scanning resolution. However, the transmitting resolution shall be within the range of permissible resolution values for that record type. When an image is captured at a scanning resolution greater than the permissible upper limit of the transmitting resolution for that record type, the image shall be subsampled, scaled, or interpolated down. This processing to reduce the scanning resolution to a lower effective resolution must be performed before the transmission occurs.

For high-resolution binary and grayscale images, the preferred transmitting resolution shall be the same as the minimum scanning resolution of 19.69 ppmm plus or minus 0.20 ppmm (500 ppi plus or minus 5 ppi). Any transmitting resolution within the range of the minimum scanning resolution to a value of 20.47 ppmm plus or minus 0.20 ppmm (520 ppi plus or minus 5 ppi) is permitted for the processing of high-resolution records.

For low-resolution binary and grayscale images, the preferred transmitting resolution shall be half of the minimum scanning resolution or 9.84 ppmm plus or minus 0.10 ppmm (250 ppi plus or minus 2.5 ppi). Any transmitting resolution within the range of half of the minimum scanning resolution to a value of 10.24 ppmm plus or minus 0.10 ppmm (260 ppi plus or minus 2.5 ppi) is permitted for the processing of low-resolution records.

For variable-resolution images, the preferred transmitting resolution is not specified, but must be at least as great as the high-resolution rate of 19.69 ppmm. At this time there is no upper limit on the variable-resolution rate for transmission. However, the recommended migration path to higher transmitting resolutions is the same as for the scanning resolutions. That is, to progress from 19.69 ppmm to 39.37 ppmm plus or minus 1% (500 ppi to 1000 ppi), from 39.37 ppmm to 78.74 ppmm plus or minus 1% (1000 ppi to 2000 ppi), etc. For images captured at a native scanning resolution greater than the permissible upper limit of a transmitting resolution step in the migration path, it may be necessary to subsample, scale, or interpolate down. The result of this processing is to obtain an effective scanning resolution that conforms to a step in the transmission migration path.

The transmitting resolution shall be contained in fields specified by the format for the variable-resolution record. However, before transmitting variable-resolution records, the operational capabilities of the sending and receiving systems should be addressed, and prior agreement should be made with the recipient agency or organization before transmitting the image.

7 File description

This standard defines the composition of a transaction file that is transmitted to a remote site or agency. As specified in this standard, certain portions of the transmission shall be in accordance with definitions provided by the receiving agency. This file shall contain one or more logical records each corresponding to one of the defined available types. The logical records are intended to convey specific types of related information pertinent to the transaction itself or to the subject of the transaction. All of the logical records belonging to a single transaction shall be contained in the same physical file.

The standard defines three logical records for the exchange of ASCII textual information fields, six logical records for the exchange of binary information and seven tagged-field record types designed for the exchange of a combination of ASCII and image data within a single logical record structure. These tagged-field records consist of ASCII tagged textual fields and binary, grayscale, or color image data. At the beginning of the record, a series of tagged fields shall be used to provide information required for processing the image data present in the last field of the logical record.

Two additional record types are reserved for inclusion in future revisions of this standard. The sixteen defined types of logical records together with the identifier for each type are listed in Table 4.

Table 4 Logical record types

Record Identifier	Logical record contents	Type of data
1	Transaction information	ASCII
2	User-defined descriptive text	ASCII
3	Low-resolution grayscale fingerprint image	Binary
4	High-resolution grayscale fingerprint image	Binary
5	Low-resolution binary fingerprint image	Binary
6	High-resolution binary fingerprint image	Binary
7	User-defined image	Binary
8	Signature image	Binary
9	Minutiae data	ASCII
10	Facial & SMT image	ASCII/Binary
11	Reserved for future use	-
12	Reserved for future use	-
13	Variable-resolution latent image	ASCII/Binary
14	Variable-resolution fingerprint image	ASCII/Binary
15	Variable-resolution palmprint Image	ASCII/Binary
16	User-defined variable-resolution testing Image	ASCII/Binary
17	Iris image	ASCII/Binary
18-98	Reserved for future use	ASCII/Binary
99	CBEFF Biometric data record	ASCII/BInary

7.1 File format

A file shall contain one or more logical records pertaining to a single subject. The data in the Type-1 record shall always be recorded in variable length fields using the 7-bit American National Standard Code for Information Interchange (ASCII) as described in ANSI X3.4-1986 and Annex A. For purposes of compatibility, the eighth (leftmost) bit shall contain a value of zero.

The text or character data in the Type-2, Type-9, and tagged-field records will normally be recorded using the 7-bit ASCII code in variable-length fields with specified upper limits on the size of the fields. For data interchange between non-English speaking agencies, character sets other than 7-bit ASCII may be used in textual fields contained in the Type-2, Type-9, and tagged-field records. UTF-8 is the preferred method of storing textual data that cannot be represented as 7-bit ASCII. This method supports international character sets for all user-defined fields in all record types. The mechanism to change character sets is described in Section 8.2.3, International

Character Sets. By definition UTF-8 and other international character exchange methods are not applicable to record Type 1 and Types 3-8.

The first field in all tagged-field records shall be labeled as field "1" and contain the length in bytes of the record. The second field shall be labeled as field "2" and contain the image designation character as described in Section 7.4. The remaining textual fields may occur in any order and contain the information as described for that particular numbered field. For tagged-field image records, Type-10 through Type-17 and Type-99, the last and concluding field shall have a tagged ASCII field number identifier "999" followed by the image data.

For the binary image Type-3, Type-4, Type-5, Type-6, and Type-8 logical records, the content and order of the recorded fields are specified by this standard. With the exception of the first two fields, the remaining fields of the Type-7 logical image record are all user-defined. All fields and data in these record types shall be recorded as binary information.

7.2 File contents

Files to be exchanged are required to contain one and only one Type-1 logical record per transaction. The Type-1 logical record shall always be the first logical record within the file. Depending on the usage and the number of fingerprint, palmprint, facial/mugshot, SMT, iris, or other biometric images available for processing, one or more additional records may be present in the file.

Table 5 lists the typical range or the number of records that may be contained in a file. These record counts are shown by logical record types for common processing functions used for search inquiries, file maintenance, image request, and image responses. The record limits stated in the table are examples of typical transactions and should only be interpreted as a guideline. Receiving agencies may impose their own specific limit for each type of logical record depending on the application. The ranges listed specify the minimum and maximum number of logical records that may be contained in the file. The mandatory inclusion of a logical record is indicated by an entry of "1" in the table. An entry of "0" indicates the exclusion of that logical record type. The appearance of "0-N" in the table indicates that the standard imposes no limits on the number of records for that logical record type. An entry of "1-N" requires that at least one record be present with no upper limit on the number of records that may be present.

7.3 Implementation domains

The Type-2 record is composed of user-defined textual fields. Many of the information fields in the Type-2 record are used in the same way by local, state, and Federal agencies and require the same data and formatting. In order to establish a common basis for field numbering, meaning, and formatting, jurisdictions that use the same general set of data fields may subscribe to a common implementation domain.

An implementation domain can be viewed as a group of agencies or organizations that have agreed to use specific pre-assigned groups of numbered tagged fields for exchanging information unique to their installations. Each tagged-field number shall also have a definition and format associated with it. The domain implementation name uniquely identifies field contents and avoids tag numbers with multiple Type-2 field definitions. Each domain created shall have a point of contact responsible for keeping the list of numbered tagged fields and assigning new numbered tagged fields to organizations within their domain. The contact shall serve as a registrar and maintain a repository including documentation for all the common and user-specific Type-2 fields contained in the implementation. As additional fields are required by specific agencies for their own applications, new field tag numbers and definitions can be registered and reserved to have a specific meaning. When this occurs, the domain registrar is responsible for registering a single definition for each tagged-field number used by different members of the domain.

Table 5 Number of logical records per transaction

Type of logical record	Master file inquiry	Latent inquiry	File maintenance	Image request	Search response	Image request response
1	1	1	1	1	1	1
2	1-N	1-N	1-N	1	1	1
3	0-14	0	0-14	0	0-14	0-14
4	0-14	0-10	0-14	0	0-14	0-14
5	0-14	0	0-14	0	0-14	0-14
6	0-14	0-10	0-14	0	0-14	0-14
7	0	0-N	0-N	0	0-N	0-N
8	0-2	0	0-2	0	0-2	0-2
9	0-10	0-N	0-N	0	0	0
10	0-N	0-N	0-N	0	0-N	0-N
13	0	0-N	0-N	0	0-N	0-N
14	0-14	0	0-14	0	0-N	0-N
15	0-8	0-N	0-8	0	0-N	0-N
16	0	0	0-N	0	0-N	0-N
17	0-2	0	0-2	0	0-2	0-2
99	0	0	0-N	0	0-N	0-N

The Criminal Justice Information Services (CJIS) Division of the Federal Bureau of Investigation (FBI) has established and maintains the North American Domain subscribed to by the Royal Canadian Mounted Police (RCMP), the FBI, and several state and Federal agencies in North America. The registrar for this domain assigns and accounts for a set of tagged fields to be used by its clients during the processing of transactions. Other domains also exist including those maintained by the United Kingdom (UK) and Interpol. These organizations have developed their own Type-2 record implementations tailored to their specific communities.

7.4 Image designation character (IDC)

With the exception of the Type-1 logical record, each of the remaining logical records present in a file shall include a separate field containing the Image Designation Character (IDC). The IDC shall be used to relate information items in the file content field of the Type-1 record to each logical record, and to properly identify and link together logical records that pertain to the same entity such as a particular finger or face. The value of the IDC shall be a sequentially assigned positive integer starting from zero and incremented by one. If two or more logical records that are different representations of the same subject matter are present in a file, each of those logical records shall contain the same IDC. For example, a high-resolution image record of a specific fingerprint and the corresponding minutiae record for the same finger would carry the same IDC number.

Although there is no upper limit on the number of logical records that may be present in a file, generally a minimum of two and no more than 25 logical records will be present in a file. For example, a tenprint search inquiry transaction may consist of a Type-1 record, a Type-2 record, 14 high-resolution Type-4 or variable-resolution Type-14 grayscale image records, two Type-8 signature records, six Type-15 palmprint records, and a Type-10 facial/mugshot image of the subject. Additional mugshot, SMT, iris, or other biometric logical records may expand the file even more. For this file configuration, the IDC shall range from "0" to "24" which would include an IDC code for the Type-2 record. Within the same file, multiple logical record types may be present and represent the same image. For example, if core and delta location information for

the rolled impressions is requested, the transmission may also need to accommodate ten minutiae records within the same file. For each image representing the ten finger positions, the same IDC would be used in both the image and minutiae records.

The IDC shall also be used to relate information items in the file contents field of the Type-1 record to each facial, SMT, iris, or other biometric image record. It properly identifies and links together different logical record types created from the same face/mugshot or SMT image.

Furthermore, zero or more Type-7 records may also be present. Each Type-7 logical record representing a specific sample shall have a unique IDC with an increment of one greater than the last IDC used.

8 Record description

8.1 Logical record types

8.1.1 Type-1 Transaction information record

A Type-1 logical record is mandatory and is required for each transaction. The Type-1 record shall provide information describing type and use or purpose for the transaction involved, a listing of each logical record included in the file, the originator or source of the physical record, and other useful and required information items.

8.1.2 Type-2 User-defined descriptive text record

Type-2 logical records shall contain user-defined textual fields providing identification and descriptive information associated with the subject of the transaction. Data contained in this record shall conform in format and content to the specifications of the domain name as listed in Domain Name field found in the Type-1 record.

8.1.3 Type-3 through Type-6 fingerprint image records

Logical record types 3-6 are used to exchange fingerprint image records originally scanned at the minimum scanning resolution of 19.69 ppmm plus or minus 0.20 ppmm (500 ppi plus or minus 5 ppi) and transmitted at the nominal pixel density of 19.69 or 9.84 ppmm. The four record types differ according to the pixel density of the transmitted image and the type of data exchanged. Table 6 summarizes the differences between the four record types.

The fingerprint image data contained in any of the logical records may be in compressed form. The WSQ algorithm has been generally used to compress grayscale images while the facsimile algorithm is used for the binary images. Typically, there may be up to 14 records of any of these logical types of fingerprint images in a file; ten rolled impressions of the individual fingers, two plain impressions of the thumbs, and two simultaneously obtained plain impressions of the four remaining fingers on each hand.

When the image data is obtained from a live-scan reader, it shall be the grayscale or binary output (or subsampled, scaled down, or interpolated output) of the live-scan fingerprint scanner and not a rescan of a hard copy fingerprint image.

Table 6 Resolution of Transmitted fingerprint image records

Record type	Data type	Preferred Pixel Density		Maximum Pixel Density	
		ppmm	ppi	ppmm	ppi
Type-3	Grayscale	9.84	250.00	10.34	252.50
Type-4	Grayscale	19.69	500.00	20.67	525.00
Type-5	Binary	9.84	250.00	10.34	252.50
Type-6	Binary	19.69	500.00	20.67	525.00

8.1.3.1 Type-3 Low-resolution grayscale fingerprint image

Type-3 logical records shall contain and be used to exchange low-resolution grayscale fingerprint image data that was scanned at no less than the minimum scanning resolution and then subsampled, scaled down, or interpolated. Alternatively, provided that it is no less than the minimum scanning resolution, the native scanning resolution may be used and the image processed. The resultant transmitting resolution in either case shall be within the bounds of the permissible transmitting resolution requirement for low-resolution images.

8.1.3.2 Type-4 High-resolution grayscale fingerprint image

Type-4 logical records shall contain and be used to exchange high-resolution grayscale fingerprint image data that was scanned at no less than the minimum scanning resolution. Alternatively, the native scanning resolution may be used. But in either case, if the scanning resolution is greater than the upper limit of the permissible transmitting resolution, the scanned data shall be subsampled, scaled down, or interpolated. The resultant transmitting resolution shall be within the bounds of the permissible transmitting resolutions for high-resolution fingerprint images.

8.1.3.3 Type-5 Low-resolution binary fingerprint image

Type-5 logical records shall contain and be used to exchange low-resolution binary fingerprint image data that was scanned at no less than the minimum scanning resolution and then subsampled, scaled down, or interpolated. Alternatively, provided that it is no less than the minimum scanning resolution, the native scanning resolution may be used and the image processed. The resultant transmitting resolution in either case shall be within the bounds of the permissible transmitting resolution requirement for low-resolution images.

8.1.3.4 Type-6 High-resolution binary fingerprint image

Type-6 logical records shall contain and be used to exchange high-resolution binary fingerprint image data that was scanned at no less than the minimum scanning resolution. Alternatively, the native scanning resolution may be used. But in either case, if the scanning resolution is greater than the upper limit of the permissible transmitting resolution, the scanned data shall be subsampled, scaled down, or interpolated. The resultant transmitting resolution shall be within the bounds of the permissible transmitting resolutions for high-resolution fingerprint images.

8.1.4 Type-7 User-defined image record

Type-7 logical records shall contain user-defined image data. Originally defined in 1993, this record type was designed for the exchange of binary image data that was not specified or described elsewhere in this standard. However, it is not intended that the use of the Type-7 record is restricted by the existence of other record types in this standard. It was intended as a temporary measure to enable the exchange of binary image data that would be defined by specific record types in later versions of the standard.

With the exception of the record length and IDC fields, the format, parameters, and types of images to be exchanged are undefined by this standard. These levels of required details shall be agreed upon between the sender and recipient.

8.1.5 Type-8 Signature image record

Type-8 logical records shall contain and be used to exchange scanned high-resolution binary or vectored signature image data. If scanned, the resolution of the image data shall be no less than the minimum scanning resolution. If necessary, the scanned image data shall be subsampled, scaled down, or interpolated to fall within the limits of the transmitting resolution requirement. The resultant transmitting resolution shall be within the bounds of the permissible transmitting resolutions for the high-resolution fingerprint images. Vectored signature data shall be expressed as a series of binary numbers.

Typically, there may be up to two of these Type-8 signature records in a file. Each Type-8 record shall contain image data representing the signature of the person being fingerprinted or of the official taking the fingerprint.

8.1.6 Type-9 Minutiae data record

Type-9 logical records shall contain and be used to exchange geometric and topological minutiae templates and related information encoded from a finger or palm. Each record shall represent the processed image data from which the location and orientation descriptors of extracted minutiae characteristics are listed. The primary use of this record type shall be for remote searching of latent prints but may also be used for applications such as physical or logical access control. Each Type-9 logical record shall contain the minutiae data read from a fingerprint, palm, or latent image.

8.1.7 Type-10 Facial & SMT image record

Type-10 tagged-field image records shall contain and be used to exchange facial and image data from scars, marks, and tattoos (SMT) together with textual information pertinent to the digitized image. The source of the image data shall be the image captured from scanning a photograph, a live image captured with a digital camera, or a digitized “freeze-frame” from a video camera.

8.1.8 Type-11 Reserved for future use

8.1.9 Type-12 Reserved for future use

8.1.10 Type-13 Variable-resolution latent image record

Type-13 tagged-field image records shall contain and be used to exchange variable-resolution latent fingerprint or palmprint image data together with fixed and user-defined textual information fields pertinent to the digitized image. In all cases, the minimum scanning resolution (or effective scanning resolution) and transmission rate for latent images shall be 39.37

ppmm plus or minus 0.40 ppmm (1000 ppi plus or minus 10 ppi). The variable-resolution latent image data contained in the Type-13 logical record shall be uncompressed or may be the output from a lossless compression algorithm. There is no limit on the number of latent records that may be present in a transaction. The Type-13 record may be considered as the tagged-field version of the Type-7 record used for the exchange of latent images.

8.1.11 Type-14 Variable-resolution fingerprint image record

Type-14 tagged-field image records shall contain and be used to exchange variable-resolution fingerprint image data, segmented flat fingerprint data, or major case print data. Fixed and user-defined textual information fields pertinent to the digitized image may also be included. Fingerprint images can be either rolled or plain (including swiped) impressions.

The scanning resolution is not specified for this record type. While the Type-14 record may be used for the exchange of 19.69 ppmm (500 ppi) images, it is strongly recommended that the minimum scanning resolution (or effective scanning resolution) for fingerprint images be 39.37 ppmm plus or minus 0.40 ppmm (1000 ppi plus or minus 10 ppi). It should be noted that as the resolution is increased, more detailed ridge and structure information becomes available in the image. However, in all cases the scanning resolution used to capture a fingerprint image shall be at least as great as the minimum scanning resolution of 19.69 ppmm (500ppi).

The variable-resolution fingerprint image data contained in the Type-14 logical record may be in a compressed form. Typically, there may be up to 14 of these Type-14 records in a file; ten rolled impressions of the individual fingers, two plain impressions of the thumbs or one plain impression of the two thumbs simultaneously, and two plain impressions of the four simultaneously obtained remaining fingers of each hand. The Type-14 record may be considered as the tagged-field variable-resolution version of the Type-4 record used for the exchange of rolled or flat fingerprint images.

8.1.12 Type-15 Variable-resolution palmprint image record

Type-15 tagged-field image records shall contain and be used to exchange variable-resolution palmprint image data together with fixed and user-defined textual information fields pertinent to the digitized image.

The scanning resolution is not specified for this record type. While the Type-15 record may be used for the exchange of 19.69 ppmm (500 ppi) images, it is strongly recommended that the minimum scanning resolution (or effective scanning resolution) for palmprint images be 39.37 ppmm plus or minus 0.40 ppmm (1000 ppi plus or minus 10 ppi). It should be noted that as the resolution is increased, more detailed ridge and structure information becomes available in the image. However, in all cases the scanning resolution used to capture a palmprint image shall be at least as great as the minimum scanning resolution of 19.69 ppmm (500ppi).

The variable-resolution palmprint image data contained in the Type-15 logical record may be in a compressed form. The maximum number of occurrences of these Type-15 records in a file is eight. Different combinations may include: two writer’s palms to pair with two full palmprints; a writer's palm with an upper and lower palm from each hand; or a writer's palm with the thenar, hypothenar and interdigital areas from each hand.

8.1.13 Type-16 User-defined variable-resolution testing image record

The Type-16 tagged-field image record is intended as the tagged-field version of the Type-7 user-defined logical record. It is designed for developmental purposes and for the exchange of miscellaneous images. This tagged-field logical record shall contain and be used to exchange,

image data together with textual information fields pertinent to the digitized image. Such an image is usually not elsewhere specified or described in this Standard.

A fixed scanning resolution is not specified for this record type. However where resolution is a factor in the captured image, it shall be at least as great as the minimum scanning resolution, that is, 19.69 ppmm (500ppi). Increases in the resolution used for capturing images should follow the recommended migration path to 39.37 ppmm (1000 ppi), 78.74 ppmm (2000 ppi), etc. It should be noted that as the resolution is increased, more detailed ridge and structure information becomes available in the image.

The variable-resolution image data contained in the Type-16 logical record may be in a compressed form. With the exception of the tagged fields at the start of the record and the descriptors for the image data, the remaining details of the Type-16 record are undefined by this standard and shall be agreed upon between the sender and recipient.

8.1.14 Type-17 Iris image record

Type-17 tagged-field image records shall contain and be used to exchange iris image data. This record type was developed to provide a basic level of interoperability and harmonization with the ANSI INCITS 379-2004 Iris Image Interchange Format and the ISO/IEC 19794-6 iris image data interchange format. Generic iris images may be exchanged using the mandatory fields of this record type. Optional fields may also be used to exchange additional information. Although the iris standards provide for two alternative iris image interchange formats, the Type-17 record shall only address and establish provision for the rectilinear image storage format that may be a raw uncompressed array of intensity values or a compressed format of the raw data.

8.1.15 Type-99 CBEFF biometric data record

Type-99 logical records shall contain and be used to exchange biometric data that is not supported by other ANSI/NIST-ITL logical record types. This provides a basic level of interoperability and harmonization with the ANSI INCITS and other biometric interchange formats. This is accomplished by using a basic record structure that is conformant with ANSI INCITS 398-2005, the Common Biometric Exchange Formats Framework (CBEFF) and a biometric data block specification registered with the International Biometrics Industry Association (IBIA)[12]. This logical record type supports and is intended to be used for biometric data types or formats that are not already represented by an existing ANSI/NIST data type.

A CBEFF conformant Biometric Information Record (BIR) is made up of a Header, a Biometric Data Block (BDB), and an optional Signature Block. The Type-99 logical record does not use the Signature Block. Information required by the Header portion is encoded as tagged fields within the Type-99 record. The final tagged field of the Type-99 record will contain biometric data as specified by the BDB interchange format.

8.2 Record format

A transaction file shall consist of one or more logical records. For each logical record contained in the file, several information fields appropriate to that record type shall be present. Each information field may contain one or more basic single-valued information items. Taken together these items are used to convey different aspects of the data contained in that field. An information field may also consist of one or more information items grouped together and

[12] For more information, go to <http://www.ibia.org>.

repeated multiple times within a field. Such a group of information items is known as a subfield. An information field may therefore consist of one or more subfields of information items.

8.2.1 Information separators

In the tagged-field logical records (Type-1, Type-2, Type-9 through Type-17, and Type-99), mechanisms for delimiting information are implemented by use of the four ASCII information separators. The delimited information may be items within a field or subfield, fields within a logical record, or multiple occurrences of subfields. These information separators are defined in the referenced standard ANSI X3.4 whose code table is shown in Annex A. These characters are used to separate and qualify information in a logical sense. Viewed in a hierarchical relationship, the File Separator *"FS"* character is the most inclusive followed by the Group Separator *"GS"*, the Record Separator *"RS"*, and finally the Unit Separator *"US"* characters. Table 7 lists these ASCII separators, the column/row position in the ASCII table shown in Annex A, and a description of their use within this standard.

Information separators should be functionally viewed as an indication of the type data that follows. The *"US"* character shall separate individual information items within a field or subfield. This is a signal that the next information item is a piece of data for that field or subfield. Multiple subfields within a field separated by the *"RS"* character signals the start of the next group of repeated information item(s). The *"GS"* separator character used between information fields signals the beginning of a new field preceding the field identifying number that shall appear. Similarly, the beginning of a new logical record shall be signaled by the appearance of the *"FS"* character.

Table 7 Information separators

ASCII character	Column / row position	Description
FS	1 / 12	Separates logical records of a file or is the terminating character of a transaction
GS	1 / 13	Separates fields of a logical record
RS	1 / 14	Separates multiple data entries (subfields) of an Information field
US	1 / 15	Separates individual information items of the field or subfield

These separators shall be in addition to any other symbols, punctuation, or delimiters as specified in this standard. Annex B illustrates the use of these characters, and Annex F provides examples of their use in the standard.

The four characters are only meaningful when used as separators of data items in the fields of the ASCII text records. There is no specific meaning attached to these characters occurring in binary image records and binary fields – they are just part of the exchanged data.

Normally**,** there should be no empty fields or information items and therefore only one separator character should appear between any two data items. The exception to this rule occurs for those instances where the data in fields or information items in a transaction are unavailable, missing, or optional, and the processing of the transaction is not dependent upon the presence of that particular data. In those instances, multiple and adjacent separator characters shall appear together rather than requiring the insertion of dummy data between separator characters.

Consider the definition of a field that consists of three information items. If the information for the second information item is missing, then two adjacent *"US"* information separator characters would occur between the first and third information items. If the second and third information items were both missing, then three separator characters should be used – two *"US"* characters in addition to the terminating field or subfield separator character. In general, if one or more mandatory or optional information items are unavailable for a field or subfield, then the appropriate number of separator character should be inserted.

It is possible to have side-by-side combinations of two or more of the four available separator characters. When data are missing or unavailable for information items, subfields, or fields, there must be one fewer separator characters present than the number of data items, subfields, or fields required.

8.2.2 Record layout

For tagged-field logical records (Type-1, Type-2, Type-9, Type-10 through Type-17, and Type-99), each information field that is used shall be numbered in accordance with this standard. The format for each field shall consist of the logical record type number (chosen from Table 4) followed by a period ".", a field number followed by a colon ":", followed by the information appropriate to that field. The tagged-field number can be any one to nine-digit number occurring between the period "." and the colon ":". It shall be interpreted as an unsigned integer field number. This implies that a field number of "2.123:" is equivalent to and shall be interpreted in the same manner as a field number of "2.000000123:".

NOTE: For purposes of illustration throughout this document, a three-digit number shall be used for enumerating the fields contained in each of the tagged-field logical records described herein. Field numbers will have the form of "TT.xxx:" where the "TT" represents the one- or two-character record type followed by a period. The next three characters comprise the appropriate field number followed by a colon. Descriptive ASCII information or the image data follows the colon.

Logical Type-1, Type-2, and Type-9 records contain only ASCII textual data fields. The entire length of the record (including field numbers, colons, and separator characters) shall be recorded as the first ASCII field within each of these record types. The ASCII File Separator "FS" control character (signifying the end of the logical record or transaction) shall follow the last byte of ASCII information and shall be included in the length of the record.

In contrast to the tagged-field concept, the Type-3 through Type-8 records contains only binary data recorded as ordered fixed-length binary fields. The entire length of the record shall be recorded in the first four-byte binary field of each record. For these binary records, neither the record number with its period, nor the field identifier number and its following colon, shall be recorded. Furthermore, as all the field lengths of these six records are either fixed and specified, none of the four separator characters (*"US", "RS", "GS",* or *"FS"*) shall be interpreted as anything other than binary data. For these binary records, the "*FS*" character shall not be used as a record separator or transaction terminating character.

The Type-10 through Type-17 and Type-99 tagged-field image records combine ASCII fields with a single binary image field. Each ASCII field contains a numeric field identifier and its descriptive data. The last physical field in a tagged-field image record shall always be numbered "999" and shall contain the image data placed immediately following the colon (":") of the field identifier. The record length field shall contain the length of the record. The ASCII File Separator *"FS"* control character shall follow the last byte of the compressed or uncompressed image data. The *"FS"* character shall signify the end of the logical record or transaction and shall be included as part of the record length.

8.2.3 International character sets

All of the fields in the Type-1 transaction record must be recorded using the 7-bit ASCII code, which is the default character set code within a transaction. In order to affect data and transaction interchanges between non-English speaking or based agencies, a technique is available to encode information using character sets other than 7-bit ASCII. Fields from theType-1 logical record and ASCII “LEN” and “IDC” text fields must still be encoded using 7-bit ASCII. But all other designated text fields can be encoded using alternate character sets. The general mechanism for accomplishing this provides for backward compatibility with existing readers, supports multiple character sets in a single text string, and handles internationally accepted character sets and text order conventions such as ISO character sets, UTF-8, and Unicode.

To switch character sets within a transaction, the Type-1 record shall contain a field listing the Directory of Character Sets (DCS) used in the transaction. The DCS is an ordered list of triples, each consisting of 3 information items containing an identifying code, the name of an international character set, and its version. The code for a specific character set and other special codes shall be embedded in the transaction to signal the conversion to a different international character set. The ASCII Start-of-Text “STX” character (0x02) followed by the equal sign “=” is used to signal the change to an alternate character set defined by the specific DCS code that follows. The entire Start-of-Text sequence is terminated by a single instance of the ASCII End-of-Text “ETX” character (0x03). This alternate character set will remain active until a closing "ETX" character is encountered or the next ASCII information separator character is encountered.

The base-64 encoding scheme, found in email, shall be used for converting non-ASCII text into ASCII form. Annex C describes the use of the base-64 system. By convention, any language or character set text string following the Start-of-Text character sequence will be base-64 encoded for subsequent processing. The field number including the period and colon, for example “2.001:”, in addition to the *“US”*, *“RS”*, *“GS”*, and *“FS”* information separators shall appear in the transaction as 7-bit ASCII characters without conversion to base-64 encoding.

All text between the STX sequence and the closing ETX character shall be encoded in base-64 notation. This is true even when the 7-bit ASCII character set is specified.

Usage of UTF-8 is allowed as an alternative to the technique that requires the usage of the ASCII "STX" and "ETX" characters to signify the beginning or end of international characters. UTF-8 is only allowed to be used for user-defined fields of all the tagged-field records. Even though there is no overlap within the character sets used with UTF-8, it should be registered in the type 1 record within DCS field 1.15 (Directory of Character Sets).

9 Type-1 transaction information record

9.1 Fields for Type-1 transaction information record

The following paragraphs describe the data contained in each field of the transaction information record. Each field shall begin with the number of the record type followed by a period followed by the appropriate field number followed by a colon. Table 8 provides a list of the fields for the transaction information record. Within a Type-1 logical record, entries shall be provided in numbered fields. It is required that the first two fields of the record are ordered. For each of the fields, Table 8 lists the “condition code” as being mandatory “M” or optional “O”, the field number, the field name, character type, field size, and occurrence limits. Based on a three digit field number, the maximum byte count size for the field is given in the last column. The two entries in the “field size per occurrence” include all character separators used in the field. The “maximum byte count” includes the field number, the information, and all the character separators. An entry

containing an "*" indicate that there is no established limit. Annex F contains an example of the use of the standard that illustrates the layout for a Type-1 logical record.

Table 8 Type-1 Transaction information record layout

Ident	Cond code	Field number	Field name	Char type	Field size per occurrence		Occur count		Max byte count
					Min	max	min	Max	
LEN	M	1.001	LOGICAL RECORD LENGTH	N	2	*	1	1	*
VER	M	1.002	VERSION NUMBER	N	5	5	1	1	11
CNT	M	1.003	FILE CONTENT	AN	4	6	2	*	*
TOT	M	1.004	TYPE OF TRANSACTION	A	4	5	1	1	11
DAT	M	1.005	DATE	N	9	9	1	1	15
PRY	O	1.006	PRIORITY	N	2	2	0	1	8
DAI	M	1.007	DESTINATION AGENCY IDENTIFIER	N	*	*	1	1	*
ORI	M	1.008	ORIGINATING AGENCY IDENTIFIER	N	*	*	1	1	*
TCN	M	1.009	TRANSACTION CONTROL NUMBER	N	*	*	1	1	*
TCR	O	1.010	TRANSACTION CONTROL REFERENCE NUMBER	N	*	*	0	1	*
NSR	M	1.011	NATIVE SCANNING RESOLUTION	AN	6	7	1	1	13
NTR	M	1.012	NOMINAL TRANSMITTING RESOLUTION	AN	6	7	1	1	13
DOM	O	1.013	DOMAIN NAME	AN	*	*	0	1	*
GMT	O	1.014	GREENWICH MEAN TIME	N	16	16	0	1	22
DCS	O	1.015	DIRECTORY OF CHARACTER SETS	AN	*	*	0	*	*

Key for character type: N = Numeric; A = Alphabetic; AN = Alphanumeric; B = Binary

9.1.1 Field 1.001: Logical record length (LEN)

This mandatory ASCII field shall contain the total count of the number of bytes in this Type-1 logical record. Field 1.001 shall begin with “1.001:” followed by the length of the record including every character of every field contained in the record and the information separators. The *“GS”* separator character shall separate the length code of Field 1.001 from the next field.

NOTE: Although it will not always be explicitly repeated in the remainder of this standard, use of separators within the Type-1, Type-2, and tagged-field logical records shall always be observed. The *“US”* separator shall separate multiple information items within a field or subfield, the *“RS”*

separator shall separate multiple subfields, and the *"GS"* separator shall separate information fields.

9.1.2 Field 1.002: Version number (VER)

This mandatory four-byte ASCII field shall be used to specify the current version number of the standard implemented by the software or system creating the file. The format of this field shall consist of four numeric characters. The first two characters shall specify the major version number. The last two characters shall be used to specify the minor revision number. The initial revision number for a version shall be "00". The entry in this field for the 2000 version is "0300" and the entry for this 2007 version of the approved standard shall be "0400". This version number addresses the optional inclusion of the tagged-field logical Type-10 through Type-17 and Type-99 image records.

9.1.3 Field 1.003: File content (CNT)

This mandatory field shall list and identify each of the logical records in the file by record type. It also specifies the order in which the remaining logical records shall appear in the file. It shall consist of two or more subfields. Each subfield shall contain two information items describing a single logical record found in the current file. The subfields shall be entered in the same order in which the logical records shall appear and be transmitted. The *"RS"* separator character shall be entered between the subfields.

The first subfield shall relate to this Type-1 Transaction record. The first information item within this subfield shall be the single character "1" (selected from Table 4) indicating that this is a Type-1 record consisting of header information. The second information item of this subfield shall be the sum of the Type-2 through Type-99 logical records contained in this file. This number is also equal to the count of the remaining subfields of Field 1.003. The *"US"* separator character shall be entered between the first and second information items.

Each of the remaining subfields of Field 1.003 relate to a single Type-2 through Type-99 logical record contained in the file. Two information items shall comprise each subfield. The first information item shall be the record identifier character(s) chosen from Table 4 that identifies the record type. The second item shall be the IDC associated with the logical record pertaining to that subfield. The IDC shall be a positive integer equal to or greater than zero. The *"US"* character shall be used to separate the two information items.

9.1.4 Field 1.004: Type of transaction (TOT)

This mandatory field shall contain an identifier, which designates the type of transaction and subsequent processing that this file should be given. (Note: Type of Transaction shall be in accordance with definitions provided by the receiving agency.) The last character of this field shall be a *"GS"* separator character used to separate Field 1.004 from the next field.

9.1.5 Field 1.005: Date (DAT)

This mandatory field shall contain the date that the transaction was initiated. The date shall appear as eight digits in the format YYYYMMDD. The YYYY characters shall represent the year of the transaction; the MM characters shall be the tens and units values of the month; and the DD characters shall be the day in the month. For example, "20070103" represents January 3, 2007.

9.1.6 Field 1.006: Priority (PRY)

This optional field shall contain a single information character to designate the urgency with which a response is desired. The values shall range from “1” to “9”, with "1" denoting the highest priority. The default value shall be defined by the agency receiving the transaction.

9.1.7 Field 1.007: Destination agency identifier (DAI)

This mandatory field shall contain the identifier of the administration or organization designated to receive the transmission. The size and data content of this field shall be user-defined and in accordance with the receiving agency.

9.1.8 Field 1.008: Originating agency identifier (ORI)

This mandatory field shall contain the identifier of the administration or organization originating the transaction. The size and data content of this field shall be user-defined and in accordance with the receiving agency.

9.1.9 Field 1.009: Transaction control number (TCN)

This mandatory field shall contain the Transaction Control Number as assigned by the originating agency. A unique alphanumeric control number shall be assigned to each transaction. For any transaction that requires a response, the respondent shall refer to this number in communicating with the originating agency.

9.1.10 Field 1.010: Transaction control reference (TCR)

This optional field shall be used for responses that refer to the TCN of a previous transaction involving an inquiry or other action that required a response.

9.1.11 Field 1.011: Native scanning resolution (NSR)

This mandatory field shall specify the native scanning resolution of the AFIS or other fingerprint or palmprint image capture device supported by the originator of the transmission. This field permits the recipient of this transaction to send response data at a transmitting resolution tailored to the NSR (if it is able to do so) or to the minimum scanning resolution. This field shall contain five bytes specifying the native scanning resolution in pixels per millimeter. The resolution shall be expressed as two numeric characters followed by a decimal point and two more numeric characters (e.g., 19.69). This field is needed because the interchange of fingerprint information between systems of the same manufacturer may, in some instances, be more efficiently done at a transmitting resolution equal to the native scanning resolution of the system rather than at the minimum scanning resolution specified in this standard. For transactions that do not contain Type-3 through Type-7 fingerprint image records, this field shall be set to “00.00”.

9.1.12 Field 1.012: Nominal transmitting resolution (NTR)

This mandatory field shall specify the nominal transmitting resolution for the fingerprint or palmprint image(s) being exchanged. This field shall contain five bytes specifying the transmitting resolution in pixels per millimeter. The resolution shall be expressed as two numeric characters followed by a decimal point and two more numeric characters (e.g., 19.69). The transmitting resolution shall be within the range specified by the transmitting resolution requirement. For transactions that do not contain Type-3 through Type-7 fingerprint image records, this field shall be set to “00.00”.

9.1.13 Field 1.013: Domain name (DOM)

This optional field identifies the domain name for the user-defined Type-2 logical record implementation. If present, the domain name may only appear once within a transaction. It shall consist of one or two information items. The first information item will uniquely identify the agency, entity, or implementation used for formatting the tagged fields in the Type-2 record. An optional second information item will contain the unique version of the particular implementation. The default value for the field shall be the North American Domain implementation and shall appear as “1.013:NORAM{US}{GS}”.

9.1.14 Field 1.014: Greenwich mean time (GMT)

This optional field provides a mechanism for expressing the date and time in terms of universal Greenwich Mean Time (GMT) units. If used, the GMT field contains the universal date that will be in addition to the local date contained in Field 1.005 (DAT). Use of the GMT field eliminates local time inconsistencies encountered when a transaction and its response are transmitted between two places separated by several time zones. The GMT provides a universal date and 24-hour clock time independent of time zones. It is represented as "YYYYMMDDHHMMSSZ”, a 15-character string that is the concatenation of the date with the GMT and concludes with a “Z”. The “YYYY” characters shall represent the year of the transaction, the “MM” characters shall be the tens and units values of the month, and the “DD” characters shall be the tens and units values of the day of the month, the “HH” characters represent the hour, the “MM” the minute, and the “SS” represents the second. The complete date shall not exceed the current date.

9.1.15 Field 1.015: Directory of character sets (DCS)

This optional field is a directory or list of character sets other than 7-bit ASCII that may appear within this transaction. This field shall contain one or more subfields, each with three information items. The first information item is the three-character identifier for the character set index number that references an associated character set throughout the transaction file. The second information item shall be the common name for the character set associated with that index number, the optional third information item is the specific version of the character set used. In the case of the use of UTF-8, the third optional information item can be used to hold the specific version of the character set used with UTF-8, so that the display terminal can be switched to the correct font family. Table 9 lists the reserved named character sets and their associated 3-character index numbers. The *“US”* character shall separate the first information item from the second and the second from the third. The *“RS”* separator character shall be used between the subfields.

Table 9 Directory of character sets

Character set index	Character set name	Description
000	ASCII	7-bit English (Default)
001	ASCII	8-bit Latin
002	UNICODE	16-bit
003	UTF-8	8-bit
004-127	----------	Reserved for ANSI/NIST future use
128-999	----------	User-defined character sets

9.2 End of transaction information record Type-1

Immediately following the last information field in the Type-1 logical record, an *"FS"* separator character shall be used to separate it from the next logical record. This *"FS"* character shall replace the *"GS"* character that is normally used between information fields.

10 Type-2 user-defined descriptive text record

Type-2 logical records shall contain textual information relating to the subject of the transaction and shall be represented in an ASCII format. This record may include such information as the state or FBI numbers, physical characteristics, demographic data, and the subject's criminal history. Every transaction usually contains one or more Type-2 records which is dependent upon the entry in the Type-of-Transaction Field 1.004 (TOT).

10.1 Fields for Type-2 logical records

The first two data fields of the Type-2 record are mandatory, ordered, and defined by this standard. The remaining fields of the record(s) shall conform to the format, content, and requirements of the subscribed Domain Name (DOM) used by the agency to which the transmission is being sent.

10.1.1 Field 2.001: Logical record length (LEN)

This mandatory ASCII field shall contain the length of the logical record specifying the total number of bytes, including every character of every field contained in the record.

10.1.2 Field 2.002: Image designation character (IDC)

This mandatory field shall be used to identify the user-defined text information contained in this record. The IDC contained in this field shall be the IDC of the Type-2 logical record as found in the file content (CNT) field of the Type-1 record.

10.1.3 Field 2.003 and above: User-defined fields

Individual fields required for given transaction types, including field size and content, shall conform to the specifications set forth by the agency to whom the transmission is being sent. Each one to nine digit tagged-field number used in the Type-2 record and its format shall conform to the requirements contained in Section 8.2.2 Record Layout.

10.2 End of Type-2 user-defined descriptive text record

Immediately following the last information field in every Type-2 logical record, an *"FS"* separator shall be used to separate it from the next logical record. This *"FS"* character shall replace the *"GS"* character that is normally used between information fields.

10.3 Additional user-defined descriptive text records

Additional Type-2 records may be included in the file. For each additional user-defined descriptive text record present, the record length and IDC fields will be required together with additional Type-2 fields needed.

11 Type-3 through Type-6 fingerprint image records

11.1 General

As discussed in Section 8.1.3, the Type-3 through Type-6 logical records are based on the use of a captured fingerprint image obtained using a scanning resolution that is at least as great as the minimal scanning resolution of 19.69 ppmm (500 ppi). The records differ from each other based on the properties of the transmitted image - data type (grayscale or binary) and resolution (scanning resolution or half-resolution).

All four of the logical records use the same field structure for the record and exchange of data. Within each logical record, entries shall be provided in nine ordered and unnumbered fields. The data recorded is in binary form – no ASCII data. The first eight fields are fixed length and total eighteen bytes. These fields precede the image data contained in field nine. The size of the ninth field is eighteen bytes less than the value specified in the LEN field. Table 10 lists the contents of each of the nine fields.

11.2 Types 3-6 logical record field descriptions

The following descriptions for each field in Table 10 are applicable to logical record types 3-6.

Table 10 Type 3-6 record layout

Field Number	Tag	Field Description	Byte Count	Byte Position
1	LEN	Logical record length	4	1-4
2	IDC	Image designation character	1	5
3	IMP	Impression type	1	6
4	FGP	Finger position	6	7-12
5	ISR	Image scanning resolution	1	13
6	HLL	Horizontal line length	2	14-15
7	VLL	Vertical line length	2	16-17
8	GCA / BCA	Compression algorithm	1	18
9	DATA	Image data	<LEN> – 18	19 through <LEN>

11.2.1 Logical record length (LEN)

This mandatory four-byte binary field shall occupy bytes one through four of each record type. It shall contain the length of the logical record specifying the total number of bytes, including every byte of all nine fields contained in the record.

11.2.2 Image designation character (IDC)

This mandatory one-byte binary field shall occupy the fifth byte of each record type. It shall be used to identify the image data contained in this record. The IDC contained in this field shall be a binary representation of the IDC found in the file content (CNT) field of the Type-1 record.

11.2.3 Impression type (IMP)

This mandatory one byte binary field shall occupy the sixth byte of each record type. The code selected from Table 11, describing the manner by which the fingerprint image information was obtained, shall be entered in this field.

Table 11 Finger & palm impression types

Description	Code
Live-scan plain	0
Live-scan rolled	1
Nonlive-scan plain	2
Nonlive-scan rolled	3
Latent impression	4
Latent tracing	5
Latent photo	6
Latent lift	7
Live-scan vertical swipe	8
Live-scan palm	10
Nonlive-scan palm	11
Latent palm impression	12
Latent palm tracing	13
Latent palm photo	14
Latent palm lift	15
Live-scan optical contact plain	20
Live-scan optical contact rolled	21
Live-scan non-optical contact plain	22
Live-scan non-optical contact rolled	23
Live-scan optical contactless plain	24
Live-scan optical contactless rolled	25
Live-scan non-optical contactless plain	26
Live-scan non-optical contactless rolled	27
Other	28
Unknown	29

Note: Table 11 is also used to describe the manner by which palm image information was obtained.

11.2.4 Finger position (FGP)

This mandatory fixed-length field of six binary bytes shall occupy the seventh through twelfth byte positions of each record type. It shall contain possible finger positions beginning in the leftmost byte of the field (byte seven of the record). The decimal code number corresponding to the known or most probable finger position shall be taken from Table 12 (only finger numbers 0-14 apply to Types 3-6) and entered as a binary number right justified and left zero filled within the eight-bit byte. Table 12 also lists the maximum image width and height dimensions for each of

the finger positions. Up to five additional finger positions may be referenced by entering the alternate finger positions in the remaining five bytes using the same format.

Table 12 Finger position code & maximum image dimensions

Finger position	Finger code	Width (mm)	Width (in)	Length (mm)	Length (in)
Unknown	0	40.6	1.6	38.1	1.5
Right thumb	1	40.6	1.6	38.1	1.5
Right index finger	2	40.6	1.6	38.1	1.5
Right middle finger	3	40.6	1.6	38.1	1.5
Right ring finger	4	40.6	1.6	38.1	1.5
Right little finger	5	40.6	1.6	38.1	1.5
Left thumb	6	40.6	1.6	38.1	1.5
Left index finger	7	40.6	1.6	38.1	1.5
Left middle finger	8	40.6	1.6	38.1	1.5
Left ring finger	9	40.6	1.6	38.1	1.5
Left little finger	10	40.6	1.6	38.1	1.5
Plain right thumb	11	25.4	1.0	50.8	2.0
Plain left thumb	12	25.4	1.0	50.8	2.0
Plain right four fingers	13	81.3	3.2	76.2	3.0
Plain left four fingers	14	81.3	3.2	76.2	3.0
Left & right thumbs	15	81.3	3.2	76.2	3.0
EJI or tip	19	114.3	4.5	127.0	5.0

Note: Finger codes 15 and 19 apply to tagged-field fingerprint image records.

If fewer than five finger position references are to be used, the unused bytes shall be filled with the binary equivalent of "255". The code "0", for "Unknown Finger", shall be used to reference every finger position from one through ten.

11.2.5 Image scanning resolution (ISR)

This mandatory one-byte binary field shall occupy the thirteenth byte of each record type.

- For Type-3 or Type-5 logical records, it shall contain a binary value of “0” if half the minimum scanning resolution is used and a “1” if half the native scanning resolution is used;
- For Type-4 or Type-6 logical records, it shall contain a binary value of “0” if the minimum scanning resolution is used and a “1” if the native scanning resolution is used.

See Section 6.2 where it is stated that the preferred transmitting resolution shall be the same as the minimum scanning resolution.

11.2.6 Horizontal line length (HLL)

This mandatory two-byte binary field shall occupy the fourteenth and fifteenth bytes of each record type. It shall be used to specify the number of pixels contained on a single horizontal line of the transmitted image.

11.2.7 Vertical line length (VLL)

This mandatory two-byte binary field shall occupy the sixteenth and seventeenth bytes of the each record type. It shall be used to specify the number of horizontal lines contained in the transmitted image.

11.2.8 Compression algorithm (GCA / BCA)

This mandatory one-byte binary field shall occupy the eighteenth byte of each record type. It shall be used to specify the type of compression algorithm used (if any). A binary zero denotes no compression. Otherwise, the contents of this byte shall be a binary representation of the number allocated to the particular compression technique used by the interchange parties. The specific code for each algorithm can be found in Table 1 or Table 2 or from the domain registrar who will maintain a registry relating these numbers to the compression algorithms.

- For the Type-3 logical record, there is no recommendation for a commonly used grayscale compression algorithm;
- For the Type-4 logical record, the Wavelet Scalar Quantization (WSQ), or the JPEG 10918 standard alogithms are recommended for compressing the high-resolution grayscale data;
- For Type-5 or Type 6 logical records, the Facsimile ANSI/EIA 538-1988 algorithm is recommended for the lossless compression and decompression of binary fingerprint images.

11.2.9 Image data

This mandatory final binary field shall contain the image data. Each pixel of the uncompressed grayscale image shall be quantized to eight bits (256 gray levels) contained in a single byte. For the exchange of an uncompressed binary image, eight pixels shall be left justified and packed into a single unsigned byte. The most significant bit of the byte shall be the first of the eight pixels scanned. If compression is used, the pixel data shall be compressed in accordance with the compression technique specified in the CGA / BCA field.

11.3 End of fixed-resolution fingerprint image record

Since each of these logical records is a defined and specified series of binary data fields, no additional bytes shall be transmitted to signify the end of this logical record type. This completes the description of a Type-3 through Type-6 fixed-resolution fingerprint image records.

11.4 Additional fixed-resolution fingerprint image records

Typically, for each of these logical record types, there may be up to thirteen additional images contained within the transaction file. For each additional image, a logical record is required.

12 Type-7 user-defined image record

Type-7 logical records shall contain user-defined binary image information relating to the transaction submitted for processing. This record type was originally defined to handle miscellaneous images such as those pertaining to mugshots, latent prints, palm prints, wrists,

toes, soles, etc. that were not addressed elsewhere in the standard. However, it is not intended that the use of the Type-7 record is restricted by the existence of other record types in this standard.

Type-7 records are still commonly used for the exchange of latent fingerprints. But since its creation, tagged-field formatted record types have also been formally defined and are used by this standard to handle mugshots (Type-10), latent fingerprint images (Type-13), variable-resolution fingerprint images (Type-14), palm print images(Type-15), and other user-defined image records (Type-16).

These images shall consist of scanned pixels that may be either binary or grayscale output. Each grayscale pixel value shall be expressed as an unsigned byte. A value of “0” shall be used to define a black pixel and an unsigned value of “255” shall be used to define a white pixel. For binary pixels, a value of “0” shall represent a white pixel and a value of “1” shall represent a black pixel. If compression is used, the algorithm shall be the same as that specified for Type-3 through Type-6 logical records.

12.1 Fields for Type-7 logical record

The Type-7 logical record is a binary record that shall not contain any ASCII data. The first two data fields of the Type-7 record are defined by this Standard. Remaining fields of the record shall conform to the requirements set forth by the agency receiving the transmission.

The first two fields are fixed length and total five bytes. These fields shall precede one or more user-defined fields, including the image data, contained in the remainder of the record.

12.1.1 Logical record length (LEN)

This mandatory four-byte binary field shall occupy bytes one through four. It shall contain the length of the logical record specifying the total number of bytes, including every byte of all the fields contained in the record.

12.1.2 Image designation character (IDC)

This mandatory one-byte binary field shall occupy the fifth byte of a Type-7 record. It shall be used to identify the image data contained in this record. The IDC contained in this field shall be a binary representation of the IDC found in the file content (CNT) field of the Type-1 record.

12.1.3 User-defined fields for Type-7 logical record

The remaining fields of the Type-7 logical record shall be user-defined. Individual fields required for a given transaction, such as field description, size, and content shall conform to the specifications set forth by the agency to whom the transmission is being sent.

12.2 End of Type-7 user-defined image record

Since the Type-7 logical record is a defined and specified series of binary data fields, no additional bytes shall be transmitted to signify the end of this logical record type.

12.3 Additional user-defined image records

Additional images may be described within the file. For each additional image, a Type-7 logical record is required.

13 Type-8 signature image record

Type-8 logical records shall contain either scanned or vectored signature data. Each Type-8 record shall cover an area of up to 1000 mm^2.

If scanned, the resolution shall be the minimum scanning resolution or the native scanning resolution, and the scan sequence shall be left to right and top to bottom. The scanned data shall be a binary representation quantized to two levels.

If vectored signature data is present, it shall be expressed as a series of binary numbers.

13.1 Fields for Type-8 logical record

When one or two Type-8 logical records are used, entries shall be provided in eight ordered and unnumbered binary fields for each signature record. Table 13 provides a list of the fields for the Type-8 logical record. The first seven fields are fixed length and shall total twelve bytes. These fields shall precede the image data contained in field eight. The size of field eight is determined from the LEN field of the record itself. The image data field is 12 bytes less than the value specified in the LEN field.

Table 13 Type-8 record layout

Field Number	Tag	Field Description	Byte Count	Byte Position
1	LEN	Logical record length	4	1-4
2	IDC	Image designation character	1	5
3	SIG	Signature type	1	6
4	SRT	Signature representation type	1	7
5	ISR	Image scanning resolution	1	8
6	HLL	Horizontal line length	2	9-10
7	VLL	Vertical line length	2	11-12
8	DATA	Signature image data	<LEN> – 12	13 through <LEN>

13.1.1 Logical record length (LEN)

This mandatory four-byte binary field shall occupy bytes one through four. It shall contain the length of the logical record expressed as the total number of bytes, including every byte of all eight fields contained in the record.

13.1.2 Image designation character (IDC)

This mandatory one-byte binary field shall occupy the fifth byte of the Type-8 record. It shall be used to identify the image data contained in the Type-8 record. The IDC contained in this field shall be a binary representation of the IDC found in the file content (CNT) field of the Type-1 record.

13.1.3 Signature type (SIG)

This mandatory one-byte binary field shall occupy the sixth byte of the Type-8 record. It shall contain a binary “0” for the signature image of the subject, or a binary “1” for the signature image of the official processing the transaction.

13.1.4 Signature representation type (SRT)

This mandatory one-byte binary field shall occupy the seventh byte of the Type-8 record. Its value shall be a binary “0” if the image is scanned and not compressed, a binary “1” if the image is scanned and compressed, and the binary equivalent of “2” if the image is vector data.

13.1.5 Image scanning resolution (ISR)

This mandatory one-byte binary field shall occupy the eighth byte of a Type-8 record. It shall contain a binary “0” if the minimum scanning resolution is used and a binary “1” if the native scanning resolution is used. A binary value of “0” shall also be used if the image is vector data.

13.1.6 Horizontal line length (HLL)

This mandatory two-byte binary field shall occupy the ninth and tenth bytes of the Type-8 record. For scanned signature data, this field shall be used to specify the number of pixels contained on a single horizontal line of the transmitted signature image. For vectored signature data, both bytes shall contain the binary value of “0”.

13.1.7 Vertical line length (VLL)

This mandatory two-byte binary field shall occupy the eleventh and twelfth bytes of the Type-8 record. For scanned signature data, this field shall be used to specify the number of horizontal lines contained in the transmitted signature image. For vectored signature data, both bytes shall contain the binary value of “0”.

13.1.8 Signature image data (DATA)

This mandatory field shall contain uncompressed scanned image signature data, compressed scanned image signature data, or vectored image signature data. The entry contained in the SRT field shall indicate which form of the signature data is present.

13.1.8.1 Uncompressed scanned image data

If the SRT field contains the binary value of “0”, then this field shall contain the uncompressed scanned binary image data for the signature. In uncompressed mode, the data shall be packed at eight pixels per byte.

13.1.8.2 Compressed scanned image data

If the SRT field contains the binary value of “1”, then this field shall contain the scanned binary image data for the signature in compressed form using the ANSI/EIA-538-1988 facsimile compression algorithm.

13.1.8.3 Vectored image data

If the SRT field contains the binary equivalent of “2”, then this field shall contain a list of vectors describing the pen position and pen pressure of line segments within the signature. Each vector shall consist of five bytes.

The first two bytes of each vector shall contain the unsigned binary X coordinate of the pen position with the high order byte containing the most significant bits. The next two bytes shall contain the unsigned Y coordinate using the same convention to denote the most significant bits. Both the X and Y coordinates shall be expressed in units of .0254 mm (.001 inches) referenced from the bottom leftmost corner of the signature. Positive values of X shall increase from left-to-right and positive values of Y shall increase from bottom-to-top.

An unsigned binary number between “0” and “255” contained in the fifth byte shall represent the pen pressure. This shall be a constant pressure until the next vector becomes active. A binary value or pressure of “0” shall represent a "pen-up" (or no pressure) condition. The binary value of “1” shall represent the least recordable pressure for a particular device, while the binary equivalent of “254” shall represent the maximum recordable pressure for that device. To denote the end of the vector list the binary equivalent of “255” shall be inserted in this entry.

13.2 End of Type-8 signature image record

Since the Type-8 logical record is a defined and specified series of binary data fields, no additional bytes shall be transmitted to signify the end of this logical record type.

13.3 Additional signature

One more signature may be described within the file. For an additional signature, a Type-8 logical record is required.

14 Type-9 minutiae data record

Type-9 records shall contain ASCII text describing minutiae and related information encoded from a finger or palm. For a tenprint search transaction, generally there may be up to ten of these Type-9 records in a file, each of which shall be for a different finger. There may be up to eight records for palmprint searches - each record representing a different area on one of the two palms. The Type-9 record shall also be used to exchange the minutiae information from latent finger or palm images between similar or different systems.

Minutiae information may be extracted and encoded in any of several different manners depending on the system that is used to scan an image, extract minutiae, and encode the minutiae template. The “standard format” defines a common block of tagged fields 1-12 based on the conventions and parameters described below in Section 14.1. Additional reserved blocks, each consisting of several tagged fields, are registered and allocated for use by specific vendors. As these blocks may contain proprietary information, no detailed information is provided regarding the content of these vendor-defined fields aside from the range of field numbers in this standard. For detailed information on each of these tagged fields, the vendor must be contacted. These alternative blocks of reserved fields, beginning at Field-13, allow vendors to encode minutiae data and any additional required characteristic or feature data in accordance with their own system’s specific hardware and software configuration. The assignment of blocks of tagged fields to specific vendors is controlled by the domain registrar responsible for the implementation domain. By default this shall be the registrar for the North American Domain. Table 14 identifies the current vendor implementations and their assigned blocks of field numbers.

Table 14 Registered vendor minutiae blocks

Fields	Implementations
1-4	ALL
5-12	Standard Format Features
13-30	IAFIS Features
31-55	Cogent Systems Features
56-70	Motorola Features
71-99	Sagem Morpho Features
100-125	NEC Features
126-150	M1-378 Features
151-175	Identix Features

The M1-378 block is a special case as it adheres to the conventions defined and described by the ANSI INCITS 378-2004 standard. Annex G contains detailed descriptions of the fields used for the M1-378 features together with the required conventions and parameters.

14.1 Minutiae and other information descriptors (Standard Format)

14.1.1 Minutia type identification

This standard defines four identifier characters that are used to describe the minutia type. These are listed in Table 15. A ridge ending shall be designated Type A. It occurs at the point on a fingerprint or palmprint that a friction ridge begins or ends without splitting into two or more continuing ridges. The ridge must be longer than it is wide. A bifurcation shall be designated Type B. It occurs at the point that a ridge divides or splits to form two ridges that continue past the point of division for a distance that is at least equal to the spacing between adjacent ridges at the point of bifurcation. A minutia shall be designated Type C, a compound type, if it is either a trifurcation (a single ridge that splits into three ridges) or a crossover (two ridges that intersect). If a minutia cannot be clearly categorized as one of the above three types, it shall be designated as undetermined, Type D.

Table 15 Minutiae types

Type	Description
A	Ridge ending
B	Bifurcation
C	Compound (trifurcation or crossover)
D	Type undetermined

14.1.2 Minutia numbering

Each minutia shall be identified by an index number that is assigned to it. The numbering shall begin at “1” and be incremented by “1” for as many times as there are minutiae encountered. This allows each minutia to be uniquely identified. The numbering of the minutiae shall be unordered.

14.1.3 Minutiae ridge counts

As required, ridge counts shall be determined from each minutia in a fingerprint or palmprint to certain other neighboring minutiae. When this occurs, ridge counts between designated minutiae shall be associated with the applicable index numbers so as to ensure maintenance of the proper relationships. Rules for identifying neighboring minutiae and the method to be used for counting the intervening ridge crossings is not part of this “standard format”.

14.1.4 Minutiae coordinate system

The relative position of minutiae entered in Type-9 records shall be expressed as positive integers in units of 0.01 mm (0.00039 in) in a Cartesian coordinate system located in Quadrant 1. In this coordinate system, values of X increase from left to right and values of Y increase from bottom to top.

Note (Informative) – This standard follows the practice of placing the origin at the lower left-corner for describing the location of minutiae. This is in contrast to the placement of the origin in the upper left-hand corner which is conventionally used for images.

For encoded minutiae from fingerprints, values for both X and Y are equal to or greater than "0000" and are less than "5000". This range of units converts to 5 cm (1.97”) in both the horizontal and vertical directions. If the conversion to this coordinate system is from a system that normally centers the fingerprint image during the registration process, that center position shall be assigned the values X = 2500, Y = 2500. Figure 3 illustrates the defined coordinate system for a fingerprint using the block of fields for the “standard format”.

For encoded minutiae from a palmprint, values of both X and Y are equal to or greater than "0000" and are less than "14000" and “21000” respectively. This range of units converts to 14 cm (5.51”) in the horizontal and 21 cm (8.27”) in the vertical directions.

The relative orientation, Theta, of a ridge ending or a bifurcation shall be expressed as positive integers in units of degrees from “0” to “359”. Theta is defined as the angle between the horizontal axis of the coordinate system and the direction that a ridge ending points, assuming that a ridge ending is analogous to a pointing finger. A ridge ending that is formed by a ridge lying parallel to the X axis, and ending in the direction of increasing values of X, shall have an orientation of zero degrees. Counterclockwise rotation of this ridge about the ridge ending shall cause the value of Theta to increase. A ridge ending pointing due east has a direction of zero degrees, due north 90 degrees and so forth. No orientation value shall be assigned to an undetermined or compound type of minutiae; therefore, a value of "000" shall be entered for Theta in the Type-9 logical record entry.

A bifurcation may be converted to a ridge ending by logical inversion, i.e., transposing the identity of ridges and valleys. The orientation of a bifurcation is expressed as if this inversion had occurred. This convention causes no significant change in the orientation of a minutia if it appears as a ridge ending in one impression of a fingerprint and as a bifurcation in another impression of the same fingerprint.

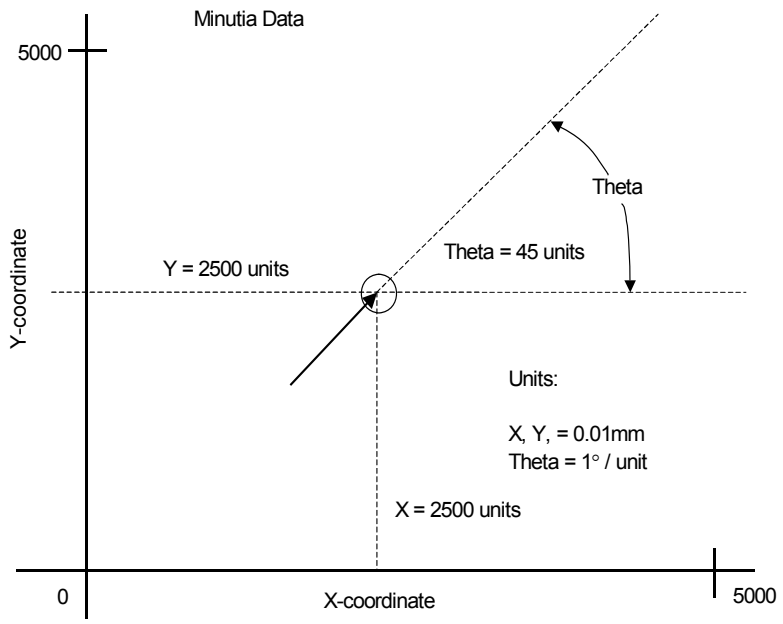

Figure 3 Minutiae coordinate system

The exact features or characteristics of a minutia that are used to establish its position and orientation are system dependent and outside the scope of this standard.

14.2 Fields for Type-9 logical record (Standard Format)

All fields of the Type-9 records shall be recorded as ASCII text. No binary fields are permissible in this tagged-field record. The first twelve ASCII fields of the Type-9 logical record provide a common or generic manner of encoding minutiae and other characteristic data. These fields are formatted in accordance with the conventions described above.

Although this logical record type can also be used to accommodate a variety of methods used by different AFIS vendors for encoding minutiae data according to their particular requirements, each vendor implementation must contain the first four fields described below. None of the fields from Field-5 through Field-12 described below are required to be present in specific vendor implementations.

14.2.1 Field 9.001: Logical record length (LEN)

This mandatory ASCII field shall contain the length of the logical record specifying the total number of bytes, including every character of every field contained in the record.

14.2.2 Field 9.002: Image designation character (IDC)

This mandatory field shall be used for the identification and location of the minutiae data. The IDC contained in this field shall match the IDC found in the file content (CNT) field of the Type-1 record.

14.2.3 Field 9.003: Impression type (IMP)

This mandatory one- or two-byte ASCII field shall describe the manner by which the fingerprint or palmprint image information was obtained. The ASCII value for the proper code as selected from Table 11 for finger impressions and palm impressions shall be entered in this field to signify the impression type.

14.2.4 Field 9.004: Minutiae format (FMT)

This mandatory one-byte field shall be used to indicate whether the information in the remainder of the record adheres to the standard format or is a user-defined format. This field shall contain an "S" to indicate that the minutiae are formatted as specified by the standard Type-9 logical record field descriptions using location information and other conventions described above. A standard Type-9 logical record will use Field-5 through Field-12 as described below.

This field shall contain a "U" to indicate that the minutiae are formatted in vendor-specific or M1-378 terms. More than one vendor representation of the same set of minutiae from one view of one finger could be present in a single Type 9 record when this field contains a “U”. Multiple blocks of vendor-specific data, which may include Field-5 through Field-12, can occur within a single Type-9 record when this field contains a “U”. Even though information may be encoded in accordance with a specific vendor’s implementation, all data fields of the Type-9 record must remain as ASCII text fields.

14.2.5 Field 9.005: Originating fingerprint reading system (OFR)

This optional field shall contain three information items relating to the originating fingerprint reading system. The originator's designation or name for the particular fingerprint or palmprint reading system that generated this record shall be placed in the first information item. The second information item of this field shall be a single character to indicate the method by which the minutiae data was read, encoded, and recorded. The following coding shall be used: (1) "A", if the data was automatically read, encoded, and recorded without any possibility of human editing; (2) "U", if human editing was possible but unneeded; (3) "E", if the data was automatically read but manually edited before encoding and recording; (4) "M", if the data was manually read. The third information item is an optional, two-character, user-generated subsystem designator that uniquely identifies the originator's equipment.

14.2.6 Field 9.006: Finger position (FGP)

This mandatory field shall contain the code designating the finger or palm position that produced information in this Type-9 record. If the exact finger or palm position cannot be determined, multiple finger positions may be entered, separated by the *“RS”* character. Table 12 and Table 35 list the codes that shall be used for each fingerprint or palmprint position.

14.2.7 Field 9.007: Fingerprint pattern classification (FPC)

This field is mandatory when the minutiae are derived from a fingerprint image. It shall contain the fingerprint pattern classification code. If the minutiae are derived from a palmprint, this field shall not be present. The field shall contain two information items. The first information item shall indicate the source of the specific pattern classification code. The source may be Table 16 or a user-defined classification code. This item shall contain a "T" to indicate that the pattern classification code is from Table 16 or a "U" to indicate that the code is user-defined. The second information item of this field shall contain the pattern classification code chosen from Table 16 or a specific user-defined code. When it is not possible to uniquely identify the fingerprint class, reference fingerprint classes may be used and shall be separated by the *“RS”* character.

Table 16 Pattern classification

Description	Code
Plain arch	PA
Tented arch	TA
Radial loop	RL
Ulnar loop	UL
Plain whorl	PW
Central pocket loop	CP
Double loop	DL
Accidental whorl	AW
Whorl, type not designated	WN
Right slant loop	RS
Left slant loop	LS
Scar	SR
Amputation	XX
Unknown or unclassifiable	UN

14.2.8 Field 9.008: Core position (CRP)

If this eight-character field is used, it shall contain the X and Y coordinate position of the core of a fingerprint. The X and Y values shall be coded as a single 8-digit integer number comprised of the 4-digit X-coordinate concatenated with the 4-digit Y-coordinate using a format of XXXXYYYY. The *"RS"* separator shall separate multiple occurrences of core positions.

14.2.9 Field 9.009: Delta(s) position (DLT)

If this eight-character field is used, it shall contain the X and Y positional coordinates of each delta that is present on the fingerprint. The X and Y values shall be recorded in the same manner as was done for the core position coordinates. The *"RS"* separator shall separate multiple occurrences of delta positions.

14.2.10 Field 9.010: Number of minutiae (MIN)

This mandatory textual field shall contain the count of the number of minutiae recorded for this fingerprint or palmprint.

14.2.11 Field 9.011: Minutiae ridge count indicator (RDG)

This mandatory single-character field shall be used to indicate the presence of minutiae ridge count information. A "0" in this field indicates that no ridge count information is available. A "1" indicates that ridge count information is available.

14.2.12 Field 9.012: Minutiae and ridge count data (MRC)

This mandatory variable-length field shall contain all of the individual minutiae and ridge count data associated with the current fingerprint or palmprint impression. It shall be comprised of as many subfields as there are minutiae stated in the minutiae count in Field 9.010. Each subfield shall be devoted to a single minutia and shall consist of multiple information items. The first two information items shall always appear; the appearance of others is system dependent. The information items are identified in the order that they shall appear. All information items shall be separated from the subsequent items by the *"US"* separator character.

14.2.12.1 Index number

The first information item shall be the index number, which shall be initialized to "1" and incremented by "1" for each additional minutia in the fingerprint. This index number serves to identify each individual minutia.

14.2.12.2 X, Y, and theta values

For minutiae encoded from fingerprints, the X and Y coordinates (two 4-digit values ranging from zero upward), and the Theta value (a 3-digit value between 000 and 359) shall comprise the second required information item. These three values shall be coded and recorded as a single 11-digit integer number corresponding to the concatenated X, Y, and Theta values, in that order.

For minutiae encoded from palmprints, the X and Y coordinates (two 5-digit values ranging from zero upward), and the three-digit Theta value shall comprise the second required information item. These three values shall be coded and recorded as a single 13-digit integer number corresponding to the concatenated X, Y, and Theta values, in that order.

14.2.12.3 Quality measure

If present, the third information item is an optional quality measure. Values shall range from "0" to "63". The value "0" shall indicate a manually encoded minutia. The value "1" shall indicate that no method of indicating a confidence level is available. Values between "2" and "63" shall indicate decreasing levels of confidence, with "2" meaning the greatest confidence. If the quality measure information item is not available for this minutia but the type and/or ridge count data is present, then a "US" information separator character must be included.

14.2.12.4 Minutia type designation

The fourth information item is an optional minutia type designation. This shall be a single alphabetic character as chosen from Table 15. If the minutia type information is not available for this minutia but ridge count data is present, then a "US" information separator character must be included.

14.2.12.5 Ridge count data

The fifth information item is optional ridge count data. It shall be formatted as a series of information items, each consisting of a minutia number and a ridge count. This information shall be conveyed by listing the identity (index number) of the distant minutia followed by a comma, and the ridge count to that distant minutia. The *"US"* character shall be used to separate these information items. These information items shall be repeated as many times as required for each minutia (subfield).

14.2.12.6 Record separator

A Record Separator character, *"RS"*, shall be used at the end of the information items to introduce the first information item concerning data for the next minutia. The process shall be continued until all of the minutiae and ridge data have been entered into the field.

14.3 End of Type-9 logical record

Immediately following the last information field in the Type-9 logical record, an *"FS"* separator shall be used to separate it from the next logical record or signify the end of the transaction. This separator character must be included in the length field of the Type-9 record.

14.4 Additional minutiae records

Typically, up to nine more fingers may be described within the file. Alternatively, up to 7 more additional palm records may be described within the file. For each additional finger or palm, a Type-9 logical record and an *"FS"* separator is required.

15 Type-10 facial & SMT image record

Type-10 records shall contain facial and/or SMT image data and related ASCII information pertaining to the specific image contained in this record. It shall be used to exchange both grayscale and color image data in a compressed or uncompressed form. Annex F includes an example of the Type-10 facial image record.

15.1 Fields for Type-10 logical record

Table 17 lists each of the mandatory and optional fields present in a Type-10 logical record. The following paragraphs describe the data contained in each of the fields for the Type-10 logical record.

Within a Type-10 logical record, entries shall be provided in numbered fields. It is required that the first two fields of the record are ordered, and the field containing the image data shall be the last physical field in the record. For each field of the Type-10 record, Table 17 lists the "condition code" as being mandatory "M" or optional "O", the field number, the field name, character type, field size, and occurrence limits. Based on a three digit field number, the maximum byte count size for the field is given in the last column. As more digits are used for the field number, the maximum byte count will also increase. The two entries in the "field size per occurrence" include all character separators used in the field. The "maximum byte count" includes the field number, the information, and all the character separators. Fields containing entries in the "IMG" column are only applicable to that image type. An entry of "FAC" applies to a mugshot or facial image, and an entry of "SMT" applies to scar, a mark, or a tattoo image.

15.1.1 Field 10.001: Logical record length (LEN)

This mandatory ASCII field shall contain the total count of the number of bytes in the Type-10 logical record. Field 10.001 shall specify the length of the record including every character of every field contained in the record and the information separators.

Table 17 Type-10 facial and SMT record layout

Ident	Cond code	Field Number	Field Name	IMG	Char type	Field size per occurrence		Occur count		Max byte count
						min	max	min	max	
LEN	M	10.001	LOGICAL RECORD LENGTH		N	4	8	1	1	15
IDC	M	10.002	IMAGE DESIGNATION CHARACTER		N	2	5	1	1	12
IMT	M	10.003	IMAGE TYPE		A	5	7	1	1	14
SRC	M	10.004	SOURCE AGENCY / ORI		AN	10	36	1	1	43
PHD	M	10.005	PHOTO DATE		N	9	9	1	1	16
HLL	M	10.006	HORIZONTAL LINE LENGTH		N	4	5	1	1	12
VLL	M	10.007	VERTICAL LINE LENGTH		N	4	5	1	1	12
SLC	M	10.008	SCALE UNITS		N	2	2	1	1	9
HPS	M	10.009	HORIZONTAL PIXEL SCALE		N	2	5	1	1	12
VPS	M	10.010	VERTICAL PIXEL SCALE		N	2	5	1	1	12
CGA	M	10.011	COMPRESSION ALGORITHM		AN	4	6	1	1	14
CSP	M	10.012	COLOR SPACE		A	4	5	1	1	12
SAP	M	10.013	SUBJECT ACQUISITION PROFILE	FAC	N	2	4	1	1	11
RSV	-	10.014 - 10.015	RESERVED FOR FUTURE DEFINITION		--	--	--	--	--	--
SHPS	O	10.016	SCAN HOR PIXEL SCALE		N	2	5	0	1	12
SVPS	O	10.017	SCAN VERT PIXEL SCALE		N	2	5	0	1	12
RSV	-	10.018 - 10.019	RESERVED FOR FUTURE DEFINITION		--	--	--	--	--	--
POS	O	10.020	SUBJECT POSE	FAC	A	2	2	0	1	9
POA	O	10.021	POSE OFFSET ANGLE	FAC	N	2	5	0	1	12
PXS	O	10.022	PHOTO DESCRIPTION	FAC	A	4	21	0	9	196
PAS	O	10.023	PHOTO ACQUISITION SOURCE	FAC	A	7	15	0	1	22
SQS	O	10.024	SUBJECT QUALITY SCORE	FAC	N	10	35	0	9	322
SPA	O	10.025	SUBJECT POSE ANGLES	FAC	N	9	23	0	1	30
SXS	O	10.026	SUBJECT FACIAL DESCRIPTION	FAC	A	6	21	0	50	1057
SEC	O	10.027	SUBJECT EYE COLOR	FAC	A	4	4	0	1	11
SHC	O	10.028	SUBJECT HAIR COLOR	FAC	A	4	8	0	2	15
SFP	O	10.029	FACIAL FEATURE POINTS	FAC	N	10	18	0	88	1591
DMM	O	10.030	DEVICE MONITORING MODE	FAC	A	8	11	0	1	18
RSV	-	10.031 - 10.039	RESERVED FOR FUTURE DEFINITION		--	--	--	--	--	---

Ident	Cond code	Field Number	Field Name	IMG	Char type	Field size per occurrence		Occur count		Max byte count
						min	max	min	max	
SMT	M	10.040	NCIC DESIGNATION CODE	SMT	A	4	11	1	3	40
SMS	O	10.041	SCAR/MARK/TATTOO SIZE	SMT	N	4	6	0	1	13
SMD	O	10.042	SMT DESCRIPTORS	SMT	AN	16	51	0	9	466
COL	O	10.043	COLORS PRESENT	SMT	A	4	21	0	9	196
RSV	-	10.044 - 10.199	RESERVED FOR FUTURE DEFINITION		--	--	--	--	--	---
UDF	O	10.200 - 10.998	USER-DEFINED FIELDS		--	--	--	--	--	---
DATA	M	10.999	IMAGE DATA		B	2	(6*HLL* VLL)+1	1	1	(6*HLL*VLL)+8

Key for character type: N = Numeric; A = Alphabetic; AN = Alphanumeric; B = Binary

15.1.2 Field 10.002: Image designation character (IDC)

This mandatory ASCII field shall be used to identify the facial or SMT image data contained in the record. This IDC shall match the IDC found in the file content (CNT) field of the Type-1 record.

15.1.3 Field 10.003: Image type (IMT)

This mandatory ASCII field is used to indicate the type of image contained in this record. It shall contain *"FACE", "SCAR", "MARK"*, or *"TATTOO"* to indicate the appropriate image type.

15.1.4 Field 10.004: Source agency / ORI (SRC)

This mandatory ASCII field shall contain the identification of the administration or organization that originally captured the latent image contained in the record. Normally, the Originating Agency Identifier, ORI, of the agency that captured the image will be contained in this field. The SRC may contain up to 36 identifying characters and the data content of this field shall be defined by the user and be in accordance with the receiving agency.

15.1.5 Field 10.005: Photo date (PHD)

This mandatory ASCII field shall contain the date that the facial or SMT image contained in the record was captured. The date shall appear as eight digits in the format *YYYYMMDD*. The *YYYY* characters shall represent the year the image was captured; the *MM* characters shall be the tens and units values of the month; and the *DD* characters shall be the tens and units values of the day in the month. For example, 20040229 represents February 29, 2004. The complete date must be a legitimate date.

15.1.6 Field 10.006: Horizontal line length (HLL)

This mandatory ASCII field shall contain the number of pixels contained on a single horizontal line of the transmitted image.

15.1.7 Field 10.007: Vertical line length (VLL)

This mandatory ASCII field shall contain the number of horizontal lines contained in the transmitted image.

15.1.8 Field 10.008: Scale units (SLC)

This mandatory ASCII field shall specify the units used to describe the image sampling frequency (pixel density). A "1" in this field indicates pixels per inch, or a "2" indicates pixels per centimeter. A "0" in this field indicates no scale is given. For this case, the quotient of HPS/VPS gives the pixel aspect ratio.

15.1.9 Field 10.009: Horizontal pixel scale (HPS)

This mandatory ASCII field shall specify the integer pixel density used in the horizontal direction of the transmitted image providing the SLC contains a "1" or a "2". Otherwise, it indicates the horizontal component of the pixel aspect ratio.

15.1.10 Field 10.010: Vertical pixel scale (VPS)

This mandatory ASCII field shall specify the integer pixel density used in the vertical direction of the transmitted image providing the SLC contains a "1" or a "2". Otherwise, it indicates the vertical component of the pixel aspect ratio.

15.1.11 Field 10.011: Compression algorithm (CGA)

This mandatory ASCII field shall contain an entry from Table 1 (other than WSQ) to specify the algorithm used for compressing the color or grayscale image. An entry of *"NONE"* in this field indicates that the data contained in this record is uncompressed. The image shall be represented as an array of n rows by m columns by at least 8-bit pixels. Each pixel in a monochrome image shall be represented by eight or more bits. Color images shall be represented as a series of sequential samples of a red, green, and blue intensity for each pixel. The image shall be organized in row-major order, with the lowest address corresponding to the upper left corner of the image. For those images that are to be compressed, the method for the compression of facial and SMT images is specified by the baseline mode of the JPEG, JPEG 2000, or PNG algorithms.

15.1.12 Field 10.012: Color space (CSP)

This mandatory ASCII field shall contain an entry from Table 3 to identify the color space used to exchange the image data. If the color space for an RGB image cannot be determined, an entry of "RGB" shall be entered in field 10.012.

For JPEG-compressed color image files (stored using the JFIF file format), the preferred (external) color space is sRGB and an entry of “SRGB” shall be used for Field 10.012. For all grayscale (monochrome) images, an entry of "GRAY" shall be used for Field 10.012.

For JPEG 2000 images stored using the JP2 file format, the available enumerated color spaces are sRGB, sYCC, and grayscale, to be entered, respectively, as “SRGB”, “SYCC”, and “GRAY” in Field 10.012. The preferred (external) color space for color images is sRGB. If a photo acquisition device uses another ICC[13] color profile, the acquisition system must convert the image

[13] International Color Consortium (ICC), http://www.color.org/

data to one of these enumerated color spaces before the JP2 file may be embedded in a Type 10 record.

For uncompressed color images containing non-interleaved red, green, and blue pixels in that order, the preferred color space is sRGB and an entry of “SRGB” shall be used for Field 10.012.

Note that the field codes do not determine if the image data is JPEG, JPEG 2000, or uncompressed color images. Field 10.011 will need to be examined to make that determination.

15.1.13 Field 10.013: Subject Acquisition Profile (SAP)

The Subject Acquisition Profile (SAP) is a mandatory ASCII text field when field 10.003 contains "FACE”. The intent of this field is to provide a general description of the criteria under which the facial image was captured. This field shall contain an ASCII character code selected from Table 18 to indicate the numeric value of the acquisition profile and conditions used to acquire the image. Typically, the higher the value, the stronger the acquisition requirements become. Therefore, in the text below, the SAP value will also be denoted as a “level”.

Together with Table 18 is a brief description of each of the levels. Note that levels 10 to 15 denote transactions associated with image acquisition under the guidance of other facial standards or application profiles. Levels 30 to 51 reference best practice recommendations consisting of increasingly more stringent requirements that must be satisfied. Additional details and criteria for these levels are contained in Annex H and Annex I.

Table 18 Subject acquisition profiles

Subject Acquisition Profile	Attribute Level Code
Unknown profile	0
Surveillance facial image	1
Driver’s license image (AAMVA)	10
ANSI Full Frontal facial image (ANSI 385)	11
ANSI Token facial image (ANSI 385)	12
ISO Full Frontal facial image (ISO/IEC 19794-5)	13
ISO Token facial image (ISO/IEC 19794-5)	14
PIV facial image (NIST SP 800-76)	15
Legacy Mugshot	20
Best Practice Application - Level 30	30
Best Practice Application - Level 40	40
Best Practice Application - Level 50	50
Best Practice Application - Level 51	51

15.1.13.1 Level 0 (Unknown profile)

This level denotes any case when the Subject Acquisition Profile is unknown. This value can be used to alert systems that the profile of the face image needs to be determined manually or via advanced face image quality evaluation techniques.

Level 1 (Surveillance facial image)

This SAP denotes a surveillance facial image: a face image captured without specific regard to scene, photographic, or digital requirements. For example, an image of a face from commonly available surveillance video equipment is generally considered a surveillance facial image. Typically surveillance facial images are of relatively poor quality compared to mugshots, including significant pose angle used for the frontal view, poor image resolution, poor image contrast, etc.

15.1.13.2 Levels 10-15 (Other application profiles)

Levels 10-15 shall denote transaction associated with capture under the guidance of other facial standards or application profiles as defined below.

- Level 10 denotes a driver license facial portrait described in the AAMVA International Specification – DL/ID Card Design

- Level 11 denotes an ANSI facial image which meets requirements of the Full Frontal Image type defined in ANSI INCITS 385-2004

- Level 12 denotes an ANSI facial image which meets requirements of the Token Face Image type defined in ANSI INCITS 385-2004
- Level 13 denotes an ISO facial image that meets the requirements of the Full Frontal Image defined in International standard ISO/IEC 19794-5

- Level 14 denotes an ISO facial image that meets the requirements of the Token Face Image type defined in International standard ISO/IEC 19794-5

- Level 15 denotes a PIV facial image which meets requirements of Biometric Data Specification for Personal Identity Verification.

Note that the facial images of Levels 13 and 14 may come from travel documents as described in "Deployment of Machine Readable Travel Documents'', ICAO Technical Report, version 2.0 .

15.1.13.3 Level 20 (Legacy facial mugshot)

A transaction conforming to this application profile level shall be a mugshot formatted according to ANSI/NIST-ITL 2000, but not necessarily or known to be conforming to the best practice requirements given in profile 30 below. The subject pose(s) can be Frontal, Profile, or Angled.

15.1.13.4 Best Practice Application Level 30

A transaction conforming to a level 30 application profile shall include at least one mugshot record conforming to all best practice requirements (BPR) in Annex H. These mugshots shall adhere to strict background, lighting, and resolution requirements. In particular, the background is 18% gray, the lighting is three-point, and the image size is at least 480x600 pixels with an aspect ratio of 1:1.25.

15.1.13.5 Best Practice Application Level 40

A facial image conforming to the level 40 application profile can be captured with an off-the-shelf 1 megapixel camera. Annex I contains detailed information for the capture of level 40, 50, and 51 facial images. Requirements for conformance with level 40 facial image capture include the following:

- Conformance to the minimum requirements for the capture of level 30 facial images
- At least one frontal face image shall be captured which conforms to the "face image capture requirements"
- The minimum number of pixels in the electronic digital image shall be 768 pixels in the horizontal direction by 1024 pixels in the vertical direction and
- Facial images shall conform to the "head and shoulders" composition detailed requirements.

It should be noted that the image quality of the captured facial images will be improved as the number of pixels in both directions are increased. However, as images are captured with an increased number of pixels, the 3:4 (Width:Height) aspect ratio shall be maintained.

15.1.13.6 Best Practice Application Level 50 and Level 51

A transaction conforming to the level 50 and level 51 application profiles shall include "face image capture requirements" as described in Annex I. These profile levels are intended to allow for examination of up to forensic-level (10 ppmm) detail on a subject's face. The only difference between levels 50 and 51 is that level 50 specifies the "head and shoulders" composition requirements while level 51 specifies the "head only" composition requirements.

Identification applications require approximately 1700 pixels wide by 2515 pixels high on the face for the 99th percentile male in the U.S. population. Allocating 50% of the image width for the head requires approximately 3400 pixels for a "head and shoulders photo" image width. For a level 50 image capture profile, the minimum number of pixels in the electronic digital image shall be 3300 pixels in the horizontal direction by 4400 pixels in the vertical direction. Off-the-shelf 15 (or more) megapixel digital cameras satisfy this requirement.

As an alternative, allocating 70% of the image width for the head requires approximately 2400 pixels for the "head only" facial capture. For a level 51 image capture profile, the minimum number of pixels in the electronic digital image shall be 2400 pixels in the horizontal direction by 3200 pixels in the vertical direction. Off-the-shelf 8 megapixel digital cameras satisfy this requirement.

The level 50 and level 51 SAPs allow for the encoding of very high resolution face images that are consistent with the discussion above and with the "face image capture requirements". It should be noted that the image quality of the captured facial images may be improved as the number of pixels in both directions are increased. Figure 4 illustrates the improvement in image quality from levels 30 to 50/51. However, as images are captured with an increased number of pixels, the 3:4 (Width:Height) aspect ratio shall be maintained.

15.1.14 Field 10.014-015: Reserved for future definition (RSV)

These fields are reserved for definition and inclusion in future revisions of this standard. None of these fields are to be used at this revision level. If any of these fields are present, they are to be ignored.

a. Level 30	b. Level 40	c. Levels 50 and 51

Figure 4 Examples of resolution for levels 30, 40, & 50/51

15.1.15 Field 10.016: Scanned horizontal pixel scale (SHPS)

This optional ASCII field shall specify the horizontal pixel density used for the scanning of the image providing the SLC field contains a "1" or a "2". Otherwise, it indicates the horizontal component of the pixel aspect ratio.

15.1.16 Field 10.017: Scanned vertical pixel scale (SVPS)

This optional ASCII field shall specify the vertical pixel density used for the scanning of the image providing the SLC field contains a "1" or a "2". Otherwise, it indicates the vertical component of the pixel aspect ratio.

15.1.17 Field 10.018-019: Reserved for future definition (RSV)

These fields are reserved for definition and inclusion in future revisions of this standard. None of these fields are to be used at this revision level. If any of these fields are present, they are to be ignored.

15.1.18 Field 10.020: Subject pose (POS)

This optional field is to be used for the exchange of facial image data. When included, this field shall contain one ASCII character code selected from Table 19 to describe the pose of the subject. For the angled pose entry "A", field 10.021 shall contain the offset angle from the full face orientation. For the determined 3D pose entry "D", Field 10.025 shall contain a set of determined 3D pose angles (i.e., Yaw, Pitch, and Roll angles) away from the full frontal face orientation. Note that the offset angle in Field 10.021 is opposite from the yaw angle in Field 10.025 as indicated by a minus sign.

Table 19 Subject pose

Pose description	Pose code
Full Face Frontal	F
Right Profile (90 degree)	R
Left Profile (90 degree)	L
Angled Pose	A
Determined 3D Pose	D

15.1.19 Field 10.021: Pose offset angle (POA)

This field shall only be used for the exchange of facial image data if Field 10.020 (POS) contains an *"A"* to indicate an angled pose of the subject. This field should be omitted for a full face or a profile. This ASCII field specifies the pose position of the subject at any possible orientation within a circle. Its value shall be to a nearest degree.

The offset angle shall be measured from the full-face pose position and have a range of values from -180 degrees to +180 degrees. A positive angle is used to express the angular offset as the subject rotates from a full-face pose to their right (approaching a left profile). A negative angle is used to express the angular offset as the subject rotates from a full-face pose to their left (approaching a right profile). If the entry in the POS field is an *"F", "L"*, or *"R",* the contents of this field are ignored.

15.1.20 Field 10.022: Photo description (PXS)

This optional ASCII field, retained for legacy systems, is used for the exchange of facial image data. When present, it shall consist of one or more subfields and shall describe special attributes of the captured facial image. Attributes associated with the facial image may be selected from Table 20 and entered in this field as one or more subfields separated by the "RS" separator character between the items.

Table 20 Photo descriptors

Facial image attribute	Attribute code
Subject Wearing Glasses	GLASSES
Subject Wearing Hat	HAT
Subject Wearing Scarf	SCARF
Physical Characteristics	PHYSICAL
Other Characteristics	OTHER

Physical characteristics, such as "FRECKLES" may be entered as a subfield consisting of two information items. The first is "PHYSICAL" followed by the “US” separator, followed by the characteristic as listed in the Ninth (or current) Edition of the NCIC Code Manual, December, 2000. The "OTHER" category is used to enter unlisted or miscellaneous attributes of the facial image. This information shall be entered as a two-information item subfield. The first is "OTHER"

followed by the “US” separator, followed by the unformatted text used to describe the attribute. Multiple attributes and subfields may be listed but must be separated by the “RS” character.

Note: The Subject facial description (SXS), field 26, is intended as a replacement for this PXS field. Table 20 entries are now duplicated and expanded upon in Table 22.

15.1.21 Field 10.023: Photo acquisition source (PAS)

This optional field shall specify the classification of the source of the image contained in this record. This field is mandatory if the SAP entry (Field 10.013) is "40" or greater. When included, this field shall contain an ASCII character code selected from Table 21 to describe the source of captured image data.

Table 21 Acquisition source type codes

Acquisition source type attribute	Attribute code
Unspecified or unknown	UNSPECIFIED
Static photograph from an unknown source	UNKNOWN PHOTO
Static photograph from a digital still-image camera	DIGITAL CAMERA
Static photograph from a scanner	SCANNER
Single video frame from an unknown source	UNKNOWN VIDEO
Single video frame from an analogue video camera	ANALOGUE VIDEO
Single video frame from a digital video camera	DIGITAL VIDEO
Vendor Specific source	VENDOR

The *"VENDOR"* category is used to enter unlisted or miscellaneous source attributes of the facial image. This information shall be entered as a two-information item subfield. The first is *"VENDOR"* followed by the *“US”* separator, followed by the unformatted text used to describe the attribute.

15.1.22 Field 10.024: Subject quality score (SQS)

This optional ASCII field shall specify quality score data for facial images stored in this record. Each subfield shall contain three information items separated by the "US" separator character. They identify a quality score and the algorithm used to create the quality score. This information is useful to enable the recipient of the quality score to differentiate between quality scores generated by different algorithms and adjust for any differences in processing or analysis as necessary.

1. The first information item shall be a quantitative expression of the predicted matching performance of the biometric sample. This item contains the ASCII representation of the integer image quality score between 0 and 100 assigned to the image data by a quality algorithm. Higher values indicate better quality. An entry of “255” shall indicate a failed attempt to calculate a quality score. An entry of “254” shall indicate that no attempt to calculate a quality score was made. The use of additional values to convey other information should be harmonized with ISO/IEC 19794 standards.

2. The second information item shall specify the ID of the vendor of the quality algorithm used to calculate the quality score. This 4-digit hex value is assigned by IBIA and expressed as four ASCII characters. The IBIA shall maintain the Vendor Registry of CBEFF Biometric Organizations that will map the value in this field to a registered organization.

3. The third information item shall specify a numeric product code assigned by the vendor of the quality algorithm, which may be registered with the IBIA, but it is not required to be registered. It indicates which of the vendor's algorithms was used in the calculation of the quality score. This field contains the ASCII representation of the integer product code and should be within the range 1 to 65535.

15.1.23 Field 10.025: Subject pose angles (SPA)

This optional ASCII field shall be present when Field 10.020 (POS) contains a *"D"* to indicate a set of determined 3D pose angles of the same subject. If the entry in the POS Field is an *"F", "L"*, or *"R",* the contents of this field are ignored. When present, this information shall be entered as three or six information items.

The first is the Yaw angle (rotation about the vertical 'y' axis) followed by the "*US*" separator, followed by the Pitch angle (rotation about 'x' horizontal axis), followed by the "*US*" separator, followed by the Roll angle (rotation about the 'z' axis). The fourth, fifth and sixth information items denote the uncertainty degrees for the Yaw, Pitch, and Roll angles respectively. If the second triple of angles is not present, then the uncertainty in the angles is not determined, but the additional three "US" separators shall still be included.

The first three items specify the pose of the subject estimated or measured at constrained possible orientations within a sphere. Each angle value shall be to the nearest integer degree.

If both field 10.021 and this field are present, the Yaw angle of this field shall supersede the offset angle contained in Field 10.021. Note that the Yaw angle of this field has the opposite sign of the offset angle contained in Field 10.021. Annex J contains, additional information, details, and examples of the subject pose angles.

15.1.24 Field 10.026: Subject facial description (SXS)

This optional ASCII field shall be used for the exchange of facial image data. This field is mandatory if the SAP entry (Field 10.013) is "40" or greater. When present, it shall describe the facial expression of the subject and other attributes associated with the subject's captured facial image. This field may have one or more subfields each containing a single information item. Attributes associated with the facial image may be selected from Table 22 and entered in this field. For "Physical Characteristic", enter a characteristic as listed in the Ninth(or current) Edition of the NCIC Code Manual, December, 2000. For the "Other Characteristic" enter unlisted or miscellaneous attributes as unformatted text used to describe the attribute. Multiple attributes may be listed but must be separated by the *"RS"* character.

15.1.25 Field 10.027: Subject eye color (SEC)

This optional ASCII field shall be used for the exchange of facial image data. This field is mandatory if the SAP entry (Field 10.013) is "40" or greater. When present, it shall describe the eye color of the subject as seen in the photograph. If unusual or unnatural such as may be the case when colored contact lenses are present and the "real" eye color cannot be ascertained, then the color should be labeled as "XXX". Eye color attributes and attribute codes are given by Table 23.

Table 22 Subject facial description codes

Facial description attribute	Attribute code
Expression unspecified	UNKNOWN
Neutral (non-smiling) with both eyes open and mouth closed)	NEUTRAL
Smiling where the inside of the mouth and/or teeth is not exposed (closed jaw).	SMILE
Subject Having Mouth open	MOUTH OPEN
Having Teeth visible	TEETH VISIBLE
Raising eyebrows	RAISED BROWS
Frowning	FROWNING
Looking away from the camera	EYES AWAY
Squinting	SQUINTING
Subject Wearing Left Eye Patch	LEFT EYE PATCH
Subject Wearing Right Eye Patch	RIGHT EYE PATCH
Subject Wearing Clear Glasses	CLEAR GLASSES
Subject Wearing Dark or Visible Colored Glasses (medical)	DARK GLASSES
Head covering/hat	HAT
Wearing Scarf	SCARF
Having Moustache	MOUSTACHE
Having Beard	BEARD
Ear(s) obscured by hair	NO EAR
Blinking (either or both eyes closed)	BLINK
Having Distorting Medical Condition impacting Feature Point detection	DISTORTING CONDITION
Physical Characteristics	<From NCIC Code Manual>
Other Characteristics	<Unformatted Text>

Note: This field is intended to replace the photo description field (PXS) and to enhance the content with additional descriptive information. As such, photo descriptors found in Table 20 also appear in Table 22.

15.1.26 Field 10.028: Subject hair color (SHC)

This optional ASCII field shall be used for the exchange of facial image data. This field is mandatory if the SAP entry (Field 10.013) is "40" or greater. When present, it shall contain an entry form Table 24 that describes the hair color of the subject as seen in the photograph. For unusual or unnatural colors not listed in the table, or the "real" color cannot be ascertained, the hair color should be labeled as “XXX”.

If the subject is completely bald, or has a completely shaved head, then the hair color shall be labeled as “BAL”. When the subject is predominantly bald, but hair color is discernable, then the appropriate hair color attribute code shall follow “BAL” (separated by the *“RS”* character).

Table 23 Eye color codes

Eye color attribute	Attribute code
Black	BLK
Blue	BLU
Brown	BRO
Gray	GRY
Green	GRN
Hazel	HAZ
Maroon	MAR
Multicolored	MUL
Pink	PNK
Unknown	XXX

Table 24 Hair color codes

Hair color attribute	Attribute code
Unspecified or unknown	XXX
Bald	BAL
Black	BLK
Blonde or Strawberry	BLN
Brown	BRO
Gray or Partially Gray	GRY
Red or Auburn	RED
Sandy	SDY
White	WHI
Blue	BLU
Green	GRN
Orange	ONG
Pink	PNK
Purple	PLE

15.1.27 Field 10.029: Facial feature points (FFP)

The optional ASCII field shall be used for the exchange of facial image data. When present, it shall describe special attributes of manually or automatically detected facial feature points of the captured facial image. This information shall be entered as a four-information item feature point block as described in Table 25. The first information item is feature point type. For this version of the standard the only allowable value is "1" which is followed by the "*US*" separator character. The second is feature point code, followed by the "*US*" separator character. The third is the *X* coordinate of a feature point, followed by the "*US*" separator character. The fourth and final item is the *Y* coordinate of a feature point in the facial image. Multiple facial points may be listed using these four information items. But each feature block must be separated by the "RS" separator character. The maximum number of feature points shall be 88, with the use of 84 MPEG4 feature points and 4 additional eye and nostril center feature points.

Table 25 Subject feature point field

Item	Size	Value	Notes
Feature Point Type	1 character	1	Denotes a 2D Feature Point. All other values are reserved.
Feature Point Code	3-5 characters	A.B in ASCII text A and B are described in 15.1.27.1.	The maximum value of A is 12 and of B is 15.
X coordinate	1-4 characters	Horizontal pixel count from upper left pixel.	Count starts at 0.
Y coordinate	1-4 characters	Vertical pixel count from upper left pixel.	Count starts at 0.

Feature points shall be included in the record format if they have been accurately determined, thereby providing the option that that these parameters do not have to be re-determined when the image is processed for face recognition tasks.

Typically a computer algorithm will either accurately determine the position of the feature point or completely fail and provide either clearly erroneous or no landmark information. Therefore, a method for accurate determination is the use of computer-automated feature point determination followed by human verification and potential override of the computer determined feature points.

15.1.27.1 MPEG4 Feature points

The feature point code item shall specify the feature point that is stored in the feature point block. The codes for the feature points are taken from the MPEG4 standard and defined as MPEG4 feature points. Each feature point code is represented by a notation A.B using a major (A) and a minor (B) value. The encoding of the feature point code is given by the numeric ASCII representation of the value of A.B. The period is required, and the maximum size of this entry shall be 5 characters.

Figure 5 denotes the feature point codes associated with feature points as given by Annex C of ISO/IEC 14496-2. Each code is given by major value A and minor value B. For example, the code for the left corner of the left eye is given by major value 3 and minor value 7.

15.1.27.2 Eye and nostril centre Feature Points

The eye center feature points 12.1 (left) and 12.2 (right) are defined to be the horizontal and vertical midpoints of the eye corners (3.7, 3.11) and (3.8, 3.12) respectively. The left nostril center feature point 12.3 is defined to be the midpoint of the nose feature points (9.1, 9.15) in the horizontal direction and (9.3, 9.15) in the vertical direction. Similarly, the right nostril center feature point 12.4 is defined to be the midpoint of the nose feature points (9.2, 9.15) in the horizontal direction and (9.3, 9.15) in the vertical direction. Both the eye center and nostril center Feature points are shown in Figure 6 and values given in Table 26.

Table 26 Eye and nostril center feature point codes

Center Feature Point	Midpoint of Feature Points		Feature Point code
Left Eye	3.7, 3.11		12.1
Right Eye	3.8, 3.12		12.2
Left Nostril	Horizontal	Vertical	12.3
	9.1, 9.15	9.3,9.15	
Right Nostril	Horizontal	Vertical	12.4
	9.2, 9.15	9.3,9.15	

An example transaction for representing two feature points of eye centers is "10.029:1^{US}12.2^{US}120^{US}130^{RS}1^{US}12.1^{US}240^{US}129^{GS}".

15.1.28 Field 10.030: Device monitoring mode (DMM)

This optional field provides information describing the level of human monitoring for the image capture device. This field will contain an entry from Table 27 to indicate the monitoring mode of the biometric sample capture device.

Table 27 Device monitoring modes

CONDITION	DESCRIPTION
CONTROLLED	Operator physically controls the subject to acquire biometric sample
ASSISTED	Person available to provide assistance to subject submitting the biometric
OBSERVED	Person present to observe operation of the device but provides no assistance
UNATTENDED	No one present to observe or provide assistance
UNKNOWN	No information is known

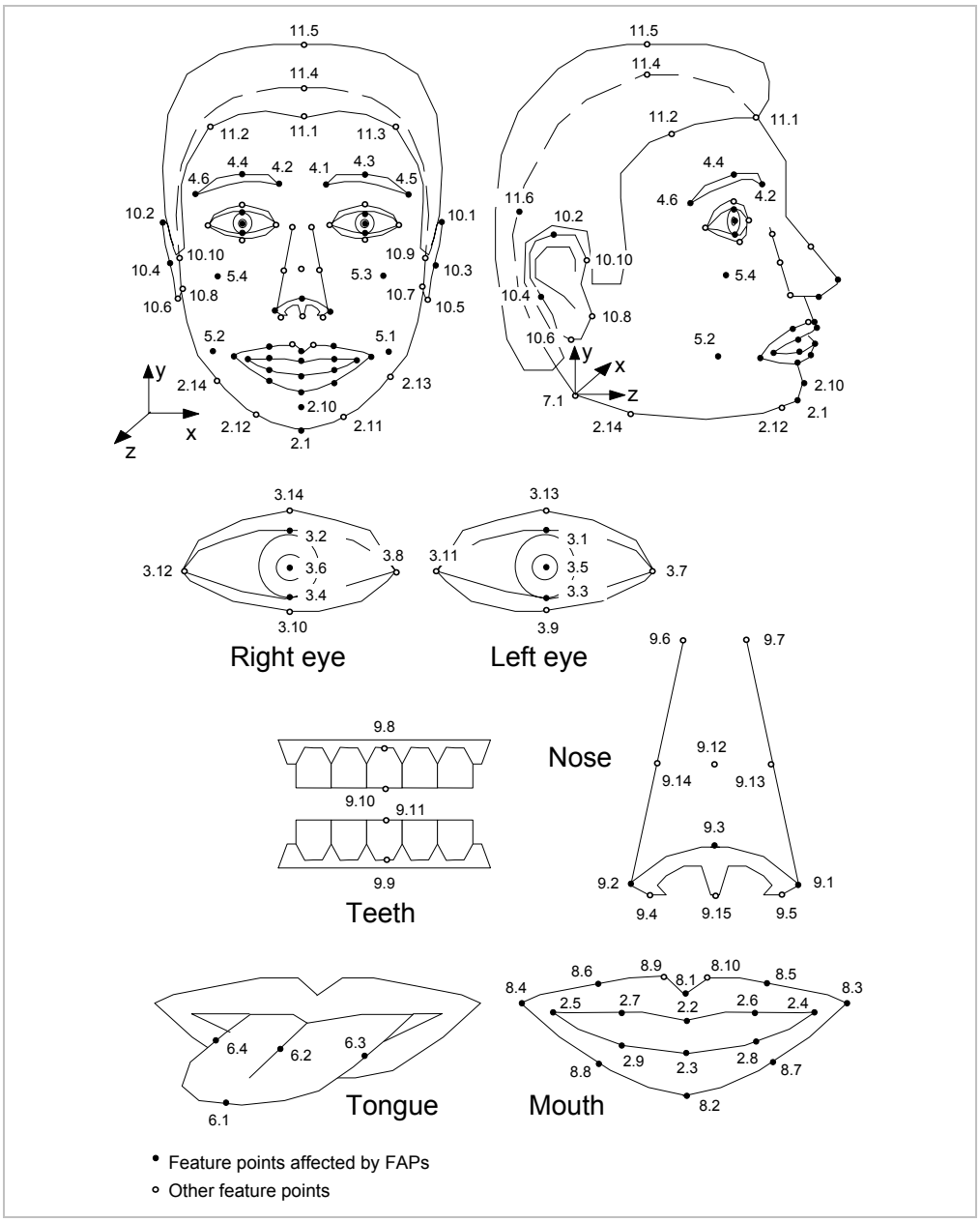

Figure 5 Feature point codes defined in ISO/IEC 14496-2

15.1.29 Field 10.031-039: Reserved for future definition (RSV)

These fields are reserved for definition and inclusion in future revisions of this standard. None of these fields are to be used at this revision level. If any of these fields are present, they are to be ignored.

15.1.30 Field 10.040: NCIC designation code (SMT)

This field is mandatory for a Type-10 record containing SMT image data. It is used to identify a general location of the captured scar, mark, tattoo, or other characteristic (including piercings) in

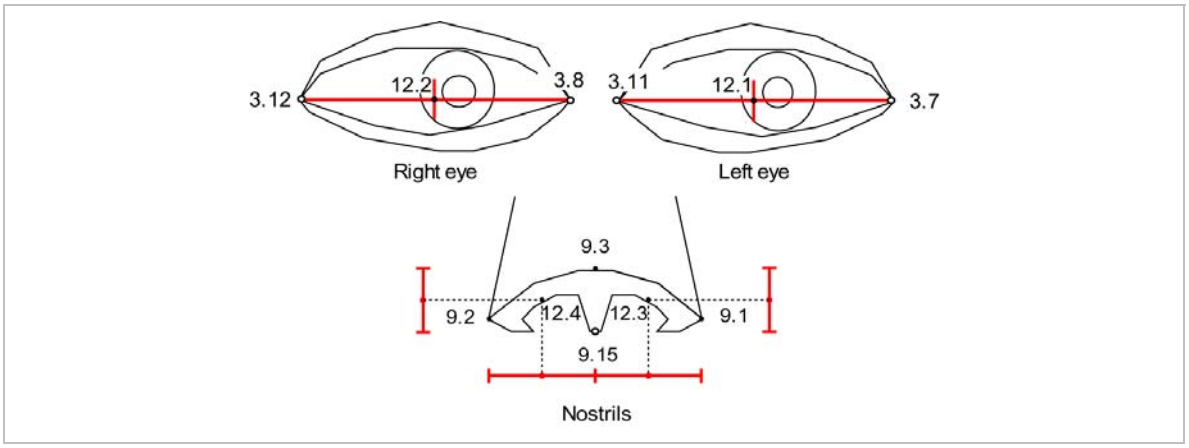

Figure 6 Eye and nostril center feature points

an image. The contents of this field will be an entry chosen from the December, 2000 ninth (or current) edition of the NCIC Code Manual. The captured image can encompass an area larger than that specified by a single NCIC body part code for the particular image type. This situation can be accommodated by listing multiple NCIC codes separated by the *"RS"* separator character. In this case the primary code is listed first.

For the *"marks"* category, the NCIC manual lists the common locations for needle track marks. For other body part locations not listed under the *"marks"* category, use the body location codes listed for scars.

15.1.31 Field 10.041: SMT size (SMS)

This optional field shall contain the dimensions of the scar, mark or tattoo. It shall consist of two information items. The height shall be the first information item followed by the *"US"* separator character followed by the width. Each dimension shall be entered to the nearest centimeter.

15.1.32 Field 10.042: SMT descriptors (SMD)

This optional field is used to describe the content of the SMT image. It shall consist of one or more subfields. Each subfield shall contain three or four information items that provide progressively detailed information describing the total image or a portion of the image.

The first information item of each subfield shall identify the source of the image as being a scar, a mark, or a tattoo. It shall contain *"SCAR"* to indicate healed scar tissue that was the result an accident or medical procedure. An entry of *"MARK"* shall be used for the pattern resulting from needle or track marks. For either case the second and third information items shall contain "OTHER" and "MISC" and the fourth information item shall contain a textual description or other information concerning the scar or mark pattern.

For deliberately applied or drawn images, the first information item will contain *"TATTOO"* to indicate a common tattoo or indelible image resulting from the pricking of the skin with a coloring matter; *"CHEMICAL"* if the image was created by the use of chemicals to burn the image into the skin; *"BRANDED"* if the image was burned into the skin using a branding iron or other form of heat; or *"CUT"* if the image was caused by incision of the skin.

The second information item shall be the general class code of tattoo chosen from Table 28. For each general class of tattoo, there are several defined subclasses. The third information item of the subfield shall be the appropriate subclass code selected from Table 29 a-h which lists the various subclasses of tattoos for each of the general classes.

Table 28 Tattoo classes

Class description	Class code
Human Forms and Features	HUMAN
Animals and Animal Features	ANIMAL
Plants	PLANT
Flags	FLAG
Objects	OBJECT
Abstractions	ABSTRACT
Insignias & Symbols	SYMBOL
Other Images	OTHER

Table 29 Tattoo subclasses

Table 29a Human tattoo subclasses

Subclass	Subclass code
Male Face	MFACE
Female Face	FFACE
Abstract Face	ABFACE
Male Body	MBODY
Female Body	FBODY
Abstract Body	ABBODY
Roles (Knight, Witch, man, etc.)	ROLES
Sports Figures (Football Player, Skier, etc.)	SPORT
Male Body Parts	MBPART
Female Body Parts	FBPART
Abstract Body Parts	ABBPART
Skulls	SKULL
Miscellaneous Human Forms	MHUMAN

Table 29b Animal tattoo subclasses

Subclass	Subclass code
Cats & Cat Heads	CAT
Dogs & Dog Heads	DOG
Other Domestic Animals	DOMESTIC
Vicious Animals (Lions, etc.)	VICIOUS
Horses (Donkeys, Mules, etc.)	HORSE
Other Wild Animals	WILD
Snakes	SNAKE
Dragons	DRAGON
Birds (Cardinal, Hawk, etc.)	BIRD
Spiders, Bugs, and Insects	INSECT
Abstract Animals	ABSTRACT
Animal Parts	PARTS
Miscellaneous Animal Forms	MANIMAL

Table 29c Plant tattoo subclasses

Subclass	Subclass code
Narcotics	NARCOTICS
Red Flowers	REDFL
Blue Flowers	BLUEFL
Yellow Flowers	YELFL
Drawings of Flowers	DRAW
Rose	ROSE
Tulip	TULIP
Lily	LILY
Miscellaneous Plants, Flowers, Vegetables	MPLANT

Table 29d Flags tattoo subclasses

Subclass	Subclass code
American Flag	USA
State Flag	STATE
Nazi Flag	NAZI
Confederate Flag	CONFED
British Flag	BRIT
Miscellaneous Flags	MFLAG

Table 29e Objects tattoo subclasses

Subclass	Subclass code
Fire	FIRE
Weapons(Guns, Arrows, etc.)	WEAP
Airplanes	PLANE
Boats, Ships, & Other Vessels	VESSEL
Trains	TRAIN
Cars, Trucks, and Vehicles	VEHICLE
Mythical (Unicorns, etc.)	MYTH
Sporting Objects (Football, Ski, Hurdles, etc.)	SPORT
Water & Nature Scenes(Rivers, Sky, Trees, etc.)	NATURE
Miscellaneous Objects	MOBJECTS

Table 29f Abstract tattoo subclasses

Subclass	Subclass code
Figure(s)	FIGURE
Sleeve	SLEEVE
Bracelet	BRACE
Anklet	ANKLET
Necklace	NECKLC
Shirt	SHIRT
Body Band	BODBND
Head Band	HEDBND
Miscellaneous Abstract	MABSTRACT

Table 29g Symbols tattoo subclasses

Subclass	Subclass code
National Symbols	NATION
Political Symbols	POLITIC
Military Symbols	MILITARY
Fraternal Symbols	FRATERNAL
Professional Symbols	PROFESS
Gang Symbols	GANG
Miscellaneous Symbols	MSYMBOLS

Table 29h Other tattoo subclasses

Subclass	Subclass code
Wording (Mom, Dad, Mary, etc.)	WORDING
Freeform Drawings	FREEFRM
Miscellaneous Images	MISC

Table 30 Color codes

Color description	Color code
Black	BLACK
Brown	BROWN
Gray	GRAY
Blue	BLUE
Green	GREEN
Orange	ORANGE
Purple	PURPLE
Red	RED
Yellow	YELLOW
White	WHITE
Multi-colored	MULTI
Outlined	OUTLINE

The final and optional information item in this subfield shall be an ASCII text string that provides additional qualifiers to describe the image or portion of the image. For example, to fully describe a tattoo, there may be a class description of *"ANIMAL",* with a subclass description of *"DOG",* and qualified by *"golden retriever with an overbite".* The *"US"* separator character will be used between information items.

An SMT image consisting of several parts or sub-images shall use multiple subfields, separated by the *"RS"* separator, to fully describe the various parts or features found in the total image. The first subfield shall describe the most predominant feature or sub-image contained in the SMT image. Subsequent subfields shall describe additional portions of the image that are not part of the main or central focal point of the image. For example, a tattoo consisting of a man with a snake on the arm being followed by a dog may contain three subfields - one describing the man, a second describing the snake, and a third describing the dog.

15.1.33 Field 10.043: Color (COL)

This optional field shall contain one subfield corresponding to each subfield contained in Field 10.042. Each subfield shall contain one or more information items that list the color(s) of the tattoo or part of the tattoo. For each subfield, the first information item in the subfield shall be the predominant color chosen from Table 30. Additional colors for the sub-field shall be entered as information items in the subfield separated by the *US* separator character.

15.1.34 Field 10.044-199: Reserved for future definition (RSV)

These fields are reserved for definition and inclusion in future revisions of this standard. None of these fields are to be used at this revision level. If any of these fields are present, they are to be ignored.

15.1.35 Field 10.200-998: User-defined fields (UDF)

These fields are user-definable fields. Their size and content shall be defined by the user and be in accordance with the receiving agency. If present they shall contain ASCII textual information.

15.1.36 Field 10.999: Image data (DATA)

This mandatory field shall contain all of the grayscale or color image data from a face, scar, mark, tattoo, or other image. It shall always be assigned field number 999 and must be the last physical field in the record. The field number designation "10.999:" is followed by the image data in a binary representation.

Each pixel of uncompressed grayscale data shall be quantized to eight bits (256 gray levels) and shall occupy a single byte. Uncompressed color image data shall be expressed as 24 or 48 bit sRGB pixels. For the 24-bit sRGB, the first byte shall contain the eight bits for the red component of the pixel, the second byte shall contain the eight bits for the green component of the pixel, and the third byte shall contain the last eight bits for the blue component of the pixel. For the 48-bit sRGB pixel, each color component will occupy two bytes. If compression is used, the pixel data shall be compressed in accordance with the compression technique specified in the CGA field. If the JPEG algorithm is to be used to compress the data, this field shall be encoded using the JFIF format specification.

15.2 End of Type-10 logical record

For the sake of consistency, immediately following the last byte of data from field 10.999 an *"FS"* separator shall be used to separate it from the next logical record. This separator must be included in the length field of the Type-10 record.

15.3 Additional facial & SMT image records

Additional Type-10 records may be included in the file. For each additional facial or SMT image, a complete Type-10 logical record together with the *"FS"* separator is required.

16 Type-11 record reserved for future use

17 Type-12 record reserved for future use

18 Type-13 variable-resolution latent image record

The Type-13 tagged-field logical record shall contain image data acquired from latent fingerprint or palmprint images. These images are intended to be transmitted to agencies that will automatically extract or provide human intervention and processing to extract the desired feature information from the images. Information regarding the scanning resolution used, the image size,

and other parameters required to process the image, are recorded as tagged fields within the record.

18.1 Fields for the Type-13 logical record

The following paragraphs describe the data contained in each of the fields for the Type-13 logical record.

Within a Type-13 logical record, entries shall be provided in numbered fields. It is required that the first two fields of the record are ordered, and the field containing the image data shall be the last physical field in the record. For each field of the Type-13 record, Table 31 lists the "condition code" as being mandatory "M" or optional "O", the field number, the field name, character type, field size, and occurrence limits. Based on a three digit field number, the maximum byte count size for the field is given in the last column. As more digits are used for the field number, the maximum byte count will also increase. The two entries in the "field size per occurrence" include all character separators used in the field. The "maximum byte count" includes the field number, the information, and all the character separators including the *"GS"* character.

18.1.1 Field 13.001: Logical record length (LEN)

This mandatory ASCII field shall contain the total count of the number of bytes in the Type-13 logical record. Field 13.001 shall specify the length of the record including every character of every field contained in the record and the information separators.

18.1.2 Field 13.002: Image designation character (IDC)

This mandatory ASCII field shall be used to identify the latent image data contained in the record. This IDC shall match the IDC found in the file content (CNT) field of the Type-1 record.

18.1.3 Field 13.003: Impression type (IMP)

This mandatory one- or two-byte ASCII field shall indicate the manner by which the latent image information was obtained. The appropriate latent code choice selected from Table 11 for finger or palm shall be entered in this field.

18.1.4 Field 13.004: Source agency / ORI (SRC)

This mandatory ASCII field shall contain the identification of the administration or organization that originally captured the latent image contained in the record. Normally, the ORI of the agency that captured the image will be contained in this field. The SRC may contain up to 36 identifying characters and the data content of this field shall be defined by the user and be in accordance with the receiving agency.

18.1.5 Field 13.005: Latent capture date (LCD)

This mandatory ASCII field shall contain the date that the latent image contained in the record was captured. The date shall appear as eight digits in the format *YYYYMMDD*. The *YYYY* characters shall represent the year the image was captured; the *MM* characters shall be the tens and units values of the month; and the *DD* characters shall be the tens and units values of the day in the month. For example, 20040229 represents February 29, 2004. The complete date must be a legitimate date.

Table 31 Type-13 Variable-resolution latent record layout

Ident	Cond code	Field number	Field name	Char type	Field size per occurrence		Occur count		Max byte count
					Min	max	min	Max	
LEN	M	13.001	LOGICAL RECORD LENGTH	N	4	8	1	1	15
IDC	M	13.002	IMAGE DESIGNATION CHARACTER	N	2	5	1	1	12
IMP	M	13.003	IMPRESSION TYPE	N	2	2	1	1	9
SRC	M	13.004	SOURCE AGENCY / ORI	AN	10	36	1	1	43
LCD	M	13.005	LATENT CAPTURE DATE	N	9	9	1	1	16
HLL	M	13.006	HORIZONTAL LINE LENGTH	N	4	5	1	1	12
VLL	M	13.007	VERTICAL LINE LENGTH	N	4	5	1	1	12
SLC	M	13.008	SCALE UNITS	N	2	2	1	1	9
HPS	M	13.009	HORIZONTAL PIXEL SCALE	N	2	5	1	1	12
VPS	M	13.010	VERTICAL PIXEL SCALE	N	2	5	1	1	12
CGA	M	13.011	COMPRESSION ALGORITHM	AN	4	6	1	1	14
BPX	M	13.012	BITS PER PIXEL	N	2	3	1	1	10
FGP	M	13.013	FINGER / PALM POSITION	N	2	3	1	6	25
SPD	O	13.014	SEARCH POSITION DESCRIPTORS	A/N	6	7	0	9	82
PPC	O	13.015	PRINT POSITION COORDINATES	A/N	15	28	0	12	343
SHPS	O	13.016	SCANNED HORIZONTAL PIXEL SCALE	N	2	5	0	1	12
SVPS	O	13.017	SCANNED VERTICAL PIXEL SCALE	N	2	5	0	1	12
RSV		13.018 - 13.019	RESERVED FOR FUTURE DEFINITION	--	--	--	--	--	--
COM	O	13.020	COMMENT	AN	2	128	0	1	135
RSV		13.021 - 13.023	RESERVED FOR FUTURE DEFINITION	--	--	--	--	--	--
LQM	O	13.024	LATENT QUALITY METRIC	N	12	38	0	4	156
RSV		13.025 - 13.199	RESERVED FOR FUTURE DEFINITION	--	--	--	--	--	--
UDF	O	13.200 - 13.998	USER-DEFINED FIELDS	--	--	--	--	--	--
DATA	M	13.999	IMAGE DATA	B	2	--	1	1	--

Key for character type: N = Numeric; A = Alphabetic; AN = Alphanumeric; B = Binary

18.1.6 Field 13.006: Horizontal line length (HLL)

This mandatory ASCII field shall contain the number of pixels contained on a single horizontal line of the transmitted image.

18.1.7 Field 13.007: Vertical line length (VLL)

This mandatory ASCII field shall contain the number of horizontal lines contained in the transmitted image.

18.1.8 Field 13.008: Scale units (SLC)

This mandatory ASCII field shall specify the units used to describe the image sampling frequency (pixel density). A "1" in this field indicates pixels per inch, or a "2" indicates pixels per centimeter. A "0" in this field indicates no scale is given. For this case, the quotient of HPS/VPS gives the pixel aspect ratio.

18.1.9 Field 13.009: Horizontal pixel scale (HPS)

This mandatory ASCII field shall specify the integer pixel density used in the horizontal direction of the transmitted image providing the SLC contains a "1" or a "2". Otherwise, it indicates the horizontal component of the pixel aspect ratio.

18.1.10 Field 13.010: Vertical pixel scale (VPS)

This mandatory ASCII field shall specify the integer pixel density used in the vertical direction of the transmitted image providing the SLC contains a "1" or a "2". Otherwise, it indicates the vertical component of the pixel aspect ratio.

18.1.11 Field 13.011: Compression algorithm (CGA)

This mandatory ASCII field shall specify the algorithm used to compress the transmitted grayscale images. An entry of *"NONE"* in this field indicates that the data contained in this record is uncompressed. For those images that are to be losslessly compressed, this field shall contain the code from Table 1 to indicate the compression method used for the latent fingerprint images. See Section 5.6.1. for additional information on the usage of JPEG 2000 for the compression of fingerprint images. The domain registrar shall maintain a registry of acceptable compression techniques and corresponding codes that may be used as they become available.

18.1.12 Field 13.012: Bits per pixel (BPX)

This mandatory ASCII field shall contain the number of bits used to represent a pixel. This field shall contain an entry of “8” for normal grayscale values of “0” to “255”. Any entry in this field greater than “8” shall represent a grayscale pixel with increased precision.

18.1.13 Field 13.013: Finger / palm position (FGP)

This mandatory tagged field shall contain one or more possible finger or palm positions that may match the latent image. The decimal code number corresponding to the known or most probable finger position shall be taken from Table 12 or the most probable palm position from Table 35 and entered as a one- or two-character ASCII subfield. Additional finger and/or palm positions may be referenced by entering the alternate position codes as subfields separated by the *“RS”* separator character. The code "0", for "Unknown Finger", shall be used to reference every finger position from one through ten. The code “20”, for “Unknown Palm”, shall be used to reference

every listed palmprint position. Code "19" shall be used to reference one or more parts of an EJI or tip.

18.1.14 Field 13.014: Search Position Descriptors (SPD)

This ASCII field shall be present if and only if the finger position code "19" appears in Field 13.013. It is used to narrow the search of the latent image in this record against a database. This field shall consist of two mandatory information items. The first is the probable decimal finger position code (0-10) taken from Table 12. A "0" indicates that all the fingers of a possible candidate should be searched. The second information item is the code taken from Table 32 to indicate the portion of the EJI or tip image in the database to search. Latent images of full-length fingers use codes FV1 through FV4 as defined in Table 32. Figure 7 is an illustration of the Entire Joint Image for a middle finger with each of the full finger views and constituent parts identified. The EJI code is used for the case where all four finger images are to be considered. For the case where the latent is to be compared to proximal, distal, or medial segments of a finger, this information item will contain the appropriate finger segment character. Multiple portions of the EJI can be listed and separated by the “RS” separator character.

Table 32 EJI and tip codes

TYPE OF IMAGE	IMAGE CODE
Entire Joint Image	EJI
Rolled Tip	TIP
Full Finger Rolled Image	FV1
Full Finger Plain Image – left side	FV2
Full Finger Plain Image – center	FV3
Full Finger Plain Image – right side	FV4
Proximal, Distal, or Medial Segments	PRX, DST, MED

NOTE: Fields 13.014 and 13.015 are included to make the standard flexible enough to accommodate many different scenarios and applications. These two fields facilitate searching of latents formatted within Type-13 records against Type-14 records contained in the various database files. The search of a database by a latent can be narrowed with the use of additional information such as finger position, finger segment, or full finger view. It is unlikely that an entire EJI will ever be left at the scene of a crime. But a latent can be searched against the EJIs in an image or features file based on a specific finger segment or full finger view. This can be accomplished for a portion of the latent described by the X and Y coordinates.

18.1.15 Field 13.015: Print Position Coordinates (PPC)

If finger position code “19” appears in field 13.013, this field contains offsets to the locations for the bounding box of the EJI, each of the full finger views, or segments within the EJI. When used, this field shall consist of six (6) mandatory information items to describe the type or portion of the latent image contained in this record and its location within an entire joint image. The first information item is the number of the full finger view with values of "FV1" through "FV4". Values of “FV1” to “FV4” specify the bounding coordinates for each full finger view. The second information item is used to identify the location of a segment within a full finger view. It will

contain the not applicable code “NA” if the image portion refers to a full finger view or to the entire joint image locations. It shall contain “PRX”, “DST”, “MED” for a proximal, distal, or medial segment. The next four information items are the horizontal and vertical offsets relative to the origin positioned in the upper left corner of the image. The horizontal offsets (X) are the pixel counts to the right, and the vertical offsets (Y) are the pixel counts down. The location of the image portion is defined by the sequence of X coordinates (LEFT, RIGHT) and the Y coordinates (TOP, BOTTOM), of its bounding box. For the case of a fingertip, the first information item shall be “TIP”, and the second information item shall be “NA”. The next four information items are the horizontal and vertical offsets as defined above. The six information items within the field are separated by five “US” separators. This information will describe either the location of the entire joint image, one full finger view, or segment. Individual full finger or segment definitions may be repeated as subfields separated by the “RS” separator.

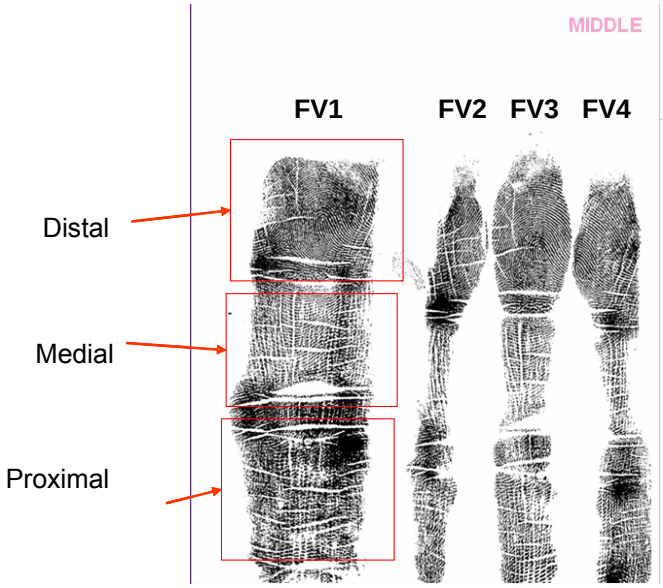

Figure 7 Entire joint image

18.1.16 Field 13.016: Scanned horizontal pixel scale (SHPS)

This optional ASCII field shall specify the horizontal pixel density used for the scanning of the original impression providing the SLC field contains a "1" or a "2". Otherwise, it indicates the horizontal component of the pixel aspect ratio.

18.1.17 Field 13.017: Scanned vertical pixel scale (SVPS)

This optional ASCII field shall specify the vertical pixel density used for the scanning of the original impression providing the SLC field contains a "1" or a "2". Otherwise, it indicates the vertical component of the pixel aspect ratio.

18.1.18 Field 13.018-019: Reserved for future definition (RSV)

These fields are reserved for definition and inclusion in future revisions of this standard. None of these fields are to be used at this revision level. If any of these fields are present, they are to be ignored.

18.1.19 Field 13.020: Comment (COM)

This optional field may be used to insert comments or other ASCII text information with the latent image data.

18.1.20 Field 13.021-023: Reserved for future definition (RSV)

These fields are reserved for definition and inclusion in future revisions of this standard. None of these fields are to be used at this revision level. If any of these fields are present, they are to be ignored.

18.1.21 Field 13.024: Latent quality metric (LQM)

This optional ASCII field is used to specify one or more different metrics of latent image quality score data for the image stored in this record. The meaning attributed to this metric must be defined and interpreted by the producer of the scoring algorithm or by the person or system used to assign the metric to the latent image. The metric may be a predictor of AFIS matcher accuracy performance or a different metric to indicate a value associated with the quality of the latent image for a particular function.

This field may contain one or more subfields, each consisting of four information items separated by the "US" separator character. The first information item is the code as chosen from Table 12 or Table 35.

The other three items identify a quality score and the algorithm used to create the quality score. This information is useful to enable the recipient of the quality score to differentiate between quality scores generated by different algorithms and adjust for any differences in processing or analysis as necessary.

- The second information item shall be a quantitative expression of the predicted matching performance of the biometric sample. This item contains the ASCII representation of the integer image quality score between 0 and 100 assigned to the image data by a quality algorithm. Higher values indicate better quality. An entry of “255” shall indicate a failed attempt to calculate a quality score. An entry of “254” shall indicate that no attempt to calculate a quality score was made. The use of additional values to convey other information should be harmonized with ISO/IEC 19794 standards.

- The third information item shall specify the ID of the vendor of the quality algorithm used to calculate the quality score. This 4-digit hex value is assigned by IBIA and expressed as four ASCII characters. The IBIA shall maintain the Vendor Registry of CBEFF Biometric Organizations that will map the value in this field to a registered organization.

- The fourth information item shall specify a numeric product code assigned by the vendor of the quality algorithm, which may be registered with the IBIA, but registration is not required. It indicates which of the vendor’s algorithms was used in the calculation of the quality score. This field contains the ASCII representation of the integer product code and should be within the range 1 to 65535.

This subfield is repeated for each latent image and quality algorithm used, separated by the “RS” character.

18.1.22 Field 13.025-199: Reserved for future definition (RSV)

These fields are reserved for definition and inclusion in future revisions of this standard. None of these fields are to be used at this revision level. If any of these fields are present, they are to be ignored.

18.1.23 Fields 13.200-998: User-defined fields (UDF)

These fields are user-definable fields. Their size and content shall be defined by the user and be in accordance with the receiving agency. If present they shall contain ASCII textual information.

18.1.24 Field 13.999: Image data (DATA)

This mandatory field shall contain all of data from a captured latent image. It shall always be assigned field number 999 and must be the last physical field in the record. The field number designation "13.999:" is followed by the image data in a binary representation.

Each pixel of uncompressed grayscale data shall normally be quantized to eight bits (256 gray levels) contained in a single byte. If the entry in BPX Field 13.012 is greater than “8”, the number of bytes required to represent a pixel will be different. If compression is used, the pixel data shall be compressed in accordance with the compression technique specified in the CGA field.

18.2 End of Type-13 variable-resolution latent image record

For the sake of consistency, immediately following the last byte of data from field 13.999 an *“FS”* separator shall be used to separate it from the next logical record. This separator must be included in the length field of the Type-13 record.

18.3 Additional variable-resolution latent image records

Additional Type-13 records may be included in the file. For each additional latent image, a complete Type-13 logical record together with the *“FS”* separator is required.

19 Type-14 variable-resolution fingerprint image record

The Type-14 tagged-field logical record shall contain and be used to exchange fingerprint image data from a rolled tenprint, an identification flat, or a major case print (also referred to as a complete friction ridge exemplar). All fingerprint impressions shall be acquired from a tenprint card, a major case print card, or from a live-scan device. Captured images are intended to be transmitted to agencies that will automatically extract the desired feature information from the images for matching purposes. Textual information regarding the scanning resolution, the image size and other parameters or comments required to process the image are recorded as tagged fields within the record.

The Type-14 record is also used to exchange identification flats (simultaneous plain impressions captured on a platen) for civil background checks. Rolled images are generally not used for this application. Three Type-14 image records are used to contain the flat fingerprint impressions. Two of the image records contain the left and right simultaneous four fingers, and the third contains the two thumbs. Offsets to the locations of image segments containing the individual fingers are included with the image records. Additional fields are defined to contain the NIST

Fingerprint Image Quality (NFIQ) metric, alternate image quality metrics, and metrics for predicting the correctness of the segmentation.

19.1 Fields for the Type-14 logical record

The following paragraphs describe the data contained in each of the fields for the Type-14 logical record.

Within a Type-14 logical record, entries shall be provided in numbered fields as illustrated in Table 33. It is required that the first two fields of the record are ordered, and the field containing the image data shall be the last physical field in the record.

For each field of the Type-14 record, Table 33 lists the "condition code" as being mandatory "M" or optional "O", the field number, the field name, character type, field size, and occurrence limits. Based on a three digit field number, the maximum byte count size for the field is given in the last column. As more digits are used for the field number, the maximum byte count will also increase. The two entries in the "field size per occurrence" include all character separators used in the field. The "maximum byte count" includes the field number, the information, and all the character separators including the *"GS"* character.

Table 33 Type-14 Variable-resolution fingerprint record layout

Ident	Cond code	Field number	Field name	Char type	Field size per occurrence		Occur count		Max byte count
					min	Max	min	Max	
LEN	M	14.001	LOGICAL RECORD LENGTH	N	4	8	1	1	15
IDC	M	14.002	IMAGE DESIGNATION CHAR.	N	2	5	1	1	12
IMP	M	14.003	IMPRESSION TYPE	N	2	2	1	1	9
SRC	M	14.004	SOURCE AGENCY / ORI	AN	10	36	1	1	43
FCD	M	14.005	FINGERPRINT CAPTURE DATE	N	9	9	1	1	16
HLL	M	14.006	HORIZONTAL LINE LENGTH	N	4	5	1	1	12
VLL	M	14.007	VERTICAL LINE LENGTH	N	4	5	1	1	12
SLC	M	14.008	SCALE UNITS	N	2	2	1	1	9
HPS	M	14.009	HORIZONTAL PIXEL SCALE	N	2	5	1	1	12
VPS	M	14.010	VERTICAL PIXEL SCALE	N	2	5	1	1	12
CGA	M	14.011	COMPRESSION ALGORITHM	AN	4	6	1	1	14
BPX	M	14.012	BITS PER PIXEL	N	2	3	1	1	10
FGP	M	14.013	FINGER POSITION	N	2	3	1	6	25
PPD	O	14.014	PRINT POSITION DESCRIPTORS	A/N	6	7	0	1	14
PPC	O	14.015	PRINT POSITION COORDINATES	A/N	15	28	0	12	343
SHPS	O	14.016	SCANNED HORIZONTAL PIXEL SCALE	N	2	5	0	1	12
SVPS	O	14.017	SCANNED VERTICAL PIXEL	N	2	5	0	1	12

Ident	Cond code	Field number	Field name	Char type	Field size per occurrence		Occur count		Max byte count
					min	Max	min	Max	
			SCALE						
AMP	O	14.018	AMPUTATED OR BANDAGED	A	5	6	0	4	31
RSV		14.019	RESERVED FOR FUTURE DEFINITION	--	--	--	--	--	--
COM	O	14.020	COMMENT	AN	2	128	0	1	135
SEG	O	14.021	FINGERPRINT SEGMENTATION POSITION(S)	N	10	23	0	*	*
NQM	O	14.022	NIST QUALITY METRIC	N	4	7	0	4	35
SQM	O	14.023	SEGMENTATION QUALITY METRIC	N	16	76	0	*	*
FQM	O	14.024	FINGERPRINT QUALITY METRIC	N	16	76	0	*	*
ASEG	O	14.025	ALTERNATE FINGER SEGMENT POSITION(S)	N	16	--	0	4	--
RSV		14.026 - 14.029	RESERVED FOR FUTURE DEFINITION	--	--	--	--	--	--
DMM	O	14.030	DEVICE MONITORING MODE	A	8	11	0	1	18
RSV		14.031 - 14.199	RESERVED FOR FUTURE DEFINITION	--	--	--	--	--	--
UDF	O	14.200 - 14.998	USER-DEFINED FIELDS	--	--	--	--	--	--
DATA	M	14.999	IMAGE DATA	B	2	--	1	1	--

Key for character type: N = Numeric; A = Alphabetic; AN = Alphanumeric; B = Binary

19.1.1 Field 14.001: Logical record length (LEN)

This mandatory ASCII field shall contain the total count of the number of bytes in the Type-14 logical record. Field 14.001 shall specify the length of the record including every character of every field contained in the record and the information separators.

19.1.2 Field 14.002: Image designation character (IDC)

This mandatory ASCII field shall be used to identify the fingerprint image data contained in the record. This IDC shall match the IDC found in the file content (CNT) field of the Type-1 record.

19.1.3 Field 14.003: Impression type (IMP)

This mandatory one- or two-byte ASCII field shall indicate the manner by which the fingerprint image information was obtained. The appropriate code choice selected from Table 11 for finger or palm shall be entered in this field.

19.1.4 Field 14.004: Source agency / ORI (SRC)

This mandatory ASCII field shall contain the identification of the administration or organization that originally captured the fingerprint images contained in the record. Normally, the ORI of the agency that captured the image will be contained in this field. The SRC may contain up to 36 identifying characters and the data content of this field shall be defined by the user and be in accordance with the receiving agency.

19.1.5 Field 14.005: Fingerprint capture date (FCD)

This mandatory ASCII field (formerly named “Tenprint Capture Date” (TCD)) shall contain the date that the fingerprint image contained in the record was captured. The date shall appear as eight digits in the format *YYYYMMDD*. The *YYYY* characters shall represent the year the image was captured; the *MM* characters shall be the tens and units values of the month; and the *DD* characters shall be the tens and units values of the day in the month. For example, 20040229 represents February 29, 2004. The complete date must be a legitimate date.

19.1.6 Field 14.006: Horizontal line length (HLL)

This mandatory ASCII field shall contain the number of pixels contained on a single horizontal line of the transmitted image.

19.1.7 Field 14.007: Vertical line length (VLL)

This mandatory ASCII field shall contain the number of horizontal lines contained in the transmitted image.

19.1.8 Field 14.008: Scale units (SLC)

This mandatory ASCII field shall specify the units used to describe the image sampling frequency (pixel density). A "1" in this field indicates pixels per inch, or a "2" indicates pixels per centimeter. A "0" in this field indicates no scale is given. For this case, the quotient of HPS/VPS gives the pixel aspect ratio.

19.1.9 Field 14.009: Horizontal pixel scale (HPS)

This mandatory ASCII field shall specify the integer pixel density used in the horizontal direction of the transmitted image providing the SLC contains a "1" or a "2". Otherwise, it indicates the horizontal component of the pixel aspect ratio.

19.1.10 Field 14.010: Vertical pixel scale (VPS)

This mandatory ASCII field shall specify the integer pixel density used in the vertical direction of the transmitted image providing the SLC contains a "1" or a "2". Otherwise, it indicates the vertical component of the pixel aspect ratio.

19.1.11 Field 14.011: Compression algorithm (CGA)

This mandatory ASCII field shall specify the algorithm used to compress the transmitted grayscale images. An entry of "NONE" in this field indicates that the data contained in this record is uncompressed. For those images that are to be compressed, this field shall contain the code from Table 1 to indicate the compression method used for this record type. The preferred methods for the compression of fingerprint images are WSQ for those images scanned or transmitted at 500 ppi or JPEG 2000 for those images scanned and transmitted at 1000 ppi. See Section 5.6.1. and the *Profile for 1000 ppi Fingerprint Compression* for additional information on the usage of JPEG 2000 for the compression of fingerprint images. The domain registrar maintains a registry of acceptable compression techniques and corresponding codes that may be used as they become available.

19.1.12 Field 14.012: Bits per pixel (BPX)

This mandatory ASCII field shall contain the number of bits used to represent a pixel. This field shall contain an entry of “8” for normal grayscale values of “0” to “255”. Any entry in this field greater than “8” shall represent a grayscale pixel with increased precision.

19.1.13 Field 14.013: Finger position (FGP)

This mandatory tagged field shall contain the finger position that matches the tenprint image. The decimal code number corresponding to the known or most probable finger position shall be taken from Table 12 and entered as a one- or two-character ASCII subfield. Table 12 also lists the maximum image dimensions that can be transmitted for each of the sixteen possible finger positions. Additional finger positions may be referenced in the transaction by entering the alternate finger positions as subfields separated by the *“RS”* separator character. The code "0", for "Unknown Finger", shall be used to reference every finger position from one through ten. Code "19" shall be used to reference one or more parts of an EJI or tip.

19.1.14 Field 14.014: Print Position Descriptors (PPD)

This ASCII field shall be present if and only if the finger position code "19" appears in Field 14.013. This field shall consist of two mandatory information items. The first is the probable decimal finger position code (0-10) taken from Table 12. The second information item is the code taken from Table 32 to indicate the portion of the EJI or tip image that is stored as a single image in the database. There may be up to 17 such images for a single finger. Images of full-length fingers use codes FV1 through FV4 as defined in Table 32. Figure 7 is an illustration of the Entire Joint Image for a middle finger with each of the full finger views and constituent parts identified.

19.1.15 Field 14.015: Print Position Coordinates (PPC)

If finger position code “19” appears in field 14.013, this field contains offsets to the locations for the bounding box of the EJI, each of the full finger views, or segments within the EJI. When used, this field shall consist of six (6) mandatory information items to describe the type or portion of the image and its location within an entire joint image. The first information item is the number of the full finger view with values of "FV1" through "FV4". Values of “FV1” to “FV4” specify the bounding coordinates for each full finger view. The second information item is used to identify the location of a segment within a full finger view. It will contain the not applicable code “NA” if the image portion refers to a full finger view or to the entire joint image locations. It shall contain “PRX”, “DST”, “MED” for a proximal, distal, or medial segment. The next four information items are the horizontal and vertical offsets relative to the origin positioned in the upper left corner of the image. The horizontal offsets (X) are the pixel counts to the right, and the vertical offsets (Y) are the pixel counts down. The location of the image portion is defined by the sequence of X coordinates (LEFT, RIGHT) and the Y coordinates (TOP, BOTTOM), of its bounding box. For the

case of a fingertip, the first information item shall be “TIP”, and the second information item shall be “NA”. The next four information items are the horizontal and vertical offsets as defined above. The six information items within the field are separated by five “US” separators. This information will describe either the location of the entire joint image, one full finger view, or segment. Individual full finger or segment definitions may be repeated as subfields separated by the “RS” separator.

19.1.16 Field 14.016: Scanned horizontal pixel scale (SHPS)

This optional ASCII field shall specify the horizontal pixel density used for the scanning of the original impression providing the SLC field contains a "1" or a "2". Otherwise, it indicates the horizontal component of the pixel aspect ratio.

19.1.17 Field 14.017: Scanned vertical pixel scale (SVPS)

This optional ASCII field shall specify the vertical pixel density used for the scanning of the original impression providing the SLC field contains a "1" or a "2". Otherwise, it indicates the vertical component of the pixel aspect ratio.

19.1.18 Field 14.018: Amputated or bandaged (AMP)

This optional ASCII field shall specify if one or more fingers are amputated or bandaged. This field shall consist of one subfield for each amputated or missing finger. Each subfield shall contain two information items separated by the “US” separator. The first item is the finger number between one and ten as chosen from Table 12. The second item is the amputated or bandaged code (AMPCD). The following is a list of allowable indicators for the AMPCD:

Descriptor	AMPCD
Amputation	XX
Unable to print (e.g., bandaged)	UP

Multiple finger positions shall be separated by the “RS” separator. This field is to be used anytime there are fewer than expected printable fingers in a submission (e.g., less than four in a left or right slap or less than two in a two-thumb slap). A partially scarred finger should be printed.

19.1.19 Field 14.019: Reserved for future definition (RSV)

These fields are reserved for definition and inclusion in future revisions of this standard. None of these fields are to be used at this revision level. If any of these fields are present, they are to be ignored.

19.1.20 Field 14.020: Comment (COM)

This optional ASCII field may be used to insert comments or other ASCII text information with the image data.

19.1.21 Field 14.021: Finger segment position(s) (SEG)

This optional ASCII field shall contain offsets to the locations of image segments containing the individual fingers within the flat images of the four simultaneous fingers from each hand or the two

simultaneous thumbs. The offsets are relative to the origin positioned in the upper left corner of the image. The horizontal offsets (X) are the pixel counts to the right, and the vertical offsets (Y) are the pixel counts down. A finger segment is defined by the FINGER NUMBER, the X coordinates (LEFT, RIGHT) and the Y coordinates (TOP, BOTTOM), of its bounding box. The five information items within a finger segment definition are separated by the “US” separator. Individual finger segment definitions are separated by the “RS” separator. If more than one algorithm is used to segment the image, successive sets finger segmentation positions shall be formatted as above and immediately follow the previous set.

19.1.22 Field 14.022: NIST quality metric (NQM)

This optional ASCII field shall contain the NIST Fingerprint Image Quality (NFIQ) scores for the individual finger(s) derived from the slap impressions or individual rolled fingerprints. It consists of two information items. The first item is the finger number between one and ten as chosen from Table 12. The second item is the quality score which is a quantitative expression of the predicted AFIS matcher accuracy performance of the fingerprint image. The scores range from "1" for the best quality image, to "5" for the worst quality image. A "254" indicates that no score was ever computed while an entry of "255" shall indicate a failed attempt to calculate the image quality metric. These two information items are separated by the “US” separator. Individual finger quality definitions are separated by the “RS” separator.

19.1.23 Field 14.023: Segmentation quality metric (SQM)

This optional ASCII field provides a measure of estimated correctness regarding the accuracy of the location of the segmented finger within the right or left four finger or two thumbs slap image. For each segmented finger, this field shall contain four information items separated by the "US" separator character. The first information item is the finger number between one and ten as chosen from Table 12.

The other three items identify a quality score and the algorithm used to create the quality score. This information is useful to enable the recipient of the quality score to differentiate between quality scores generated by different algorithms and adjust for any differences in processing or analysis as necessary.

- The second information item shall be a measure of estimated correctness regarding the accuracy of the location of the segmented finger. This item contains the ASCII representation of the integer image quality score between 0 and 100 assigned to the image data by a quality algorithm. Higher values indicate better quality. An entry of “255” shall indicate a failed attempt to calculate a quality score. An entry of “254” shall indicate that no attempt to calculate a quality score was made. The use of additional values to convey other information should be harmonized with ISO/IEC 19794 standards.

- The third information item shall specify the ID of the vendor of the quality algorithm used to calculate the quality score. This 4-digit hex value is assigned by IBIA and expressed as four ASCII characters. The IBIA shall maintain the Vendor Registry of CBEFF Biometric Organizations that will map the value in this field to a registered organization.

- The fourth information item shall specify a numeric product code assigned by the vendor of the quality algorithm, which may be registered with the IBIA, but registration is not required. It indicates which of the vendor’s algorithms was used in the calculation of the quality score. This field contains the ASCII representation of the integer product code and should be within the range 1 to 65535.

This subfield is repeated for each segmented finger whose coordinates appear in field 14.021. The “RS” character separates each set of four information items. For the case where more than

one segmentation algorithm is applied to a multi-finger plain image, the set of segmentation information items for each finger shall be ordered corresponding to the entries in field 14.021.

19.1.24 Field 14.024: Fingerprint quality metric (FQM)

This optional ASCII field is used to specify one or more different metrics of fingerprint image quality score data for the image stored in this record. The meaning attributed to this metric must be defined and interpreted by the producer of the scoring algorithm or by the person or system used to assign the metric to the fingerprint image. The metric may be a predictor of AFIS matcher accuracy performance or a different metric to indicate a value associated with the quality of the fingerprint image for a particular function.

This field may contain one or more subfields, each consisting of four information items items separated by the "US" separator character. The first information item is the finger number as chosen from Table 12.

The other three items identify a quality score and the algorithm used to create the quality score. This information is useful to enable the recipient of the quality score to differentiate between quality scores generated by different algorithms and adjust for any differences in processing or analysis as necessary.

- The second information item shall be a quantitative expression of the predicted matching performance of the biometric sample. This item contains the ASCII representation of the integer image quality score between 0 and 100 assigned to the image data by a quality algorithm. Higher values indicate better quality. An entry of “255” shall indicate a failed attempt to calculate a quality score. An entry of “254” shall indicate that no attempt to calculate a quality score was made. The use of additional values to convey other information should be harmonized with ISO/IEC 19794 standards.

- The third information item shall specify the ID of the vendor of the quality algorithm used to calculate the quality score. This 4-digit hex value is assigned by IBIA and expressed as four ASCII characters. The IBIA shall maintain the Vendor Registry of CBEFF Biometric Organizations that will map the value in this field to a registered organization.

- The fourth information item shall specify a numeric product code assigned by the vendor of the quality algorithm, which may be registered with the IBIA, but registration is not required. It indicates which of the vendor’s algorithms was used in the calculation of the quality score. This field contains the ASCII representation of the integer product code and should be within the range 1 to 65535.

This subfield is repeated for each finger image and quality algorithm used, separated by the “RS” character.

19.1.25 Field 14.025: Alternate Finger segment position(s) (ASEG)

This optional ASCII field is an alternate approach to describing the locations for each of the image segments of the individual fingers within a flat image containing the capture of four simultaneous fingers or two simultaneous thumbs. This field uses an n-vertex polygon to encompass each finger image segment, where “n” is between 3 and 99. The order of the vertices must be in their consecutive order around the perimeter of the polygon, either clockwise or counterclockwise. No two vertices may occupy the same location. The polygon side defined by the last subfield and the first subfield shall complete the polygon. The polygon must be a simple, plane figure with no sides crossing and no interior holes.

This field shall consist of one to four subfields. Each subfield shall consist of a finger number between 1 and 10, the total number of vertices of the polygon encompassing the finger, and the set of consecutive vertices. Each vertex shall be represented as horizontal and vertical pixel offsets relative to the origin positioned in the upper left corner of the image. The horizontal offsets (X) are the pixel counts to the right, and the vertical offsets (Y) are the pixel counts down from the origin. A minimum of three points is required to describe a finger location. A "US" character shall be used to separate the finger number, the number of vertices, each X coordinate, and each Y coordinate. Subfields representing each finger are delimited by the "RS" separator character.

19.1.26 Field 14.026-029: Reserved for future definition (RSV)

These fields are reserved for definition and inclusion in future revisions of this standard. None of these fields are to be used at this revision level. If any of these fields are present, they are to be ignored.

19.1.27 Field 14.030: Device monitoring mode (DMM)

This optional field provides information describing the level of human monitoring for the image capture device. This field will contain an entry from Table 27 to indicate the monitoring mode of the biometric sample capture device.

19.1.28 Field 14.031-199: Reserved for future definition (RSV)

These fields are reserved for definition and inclusion in future revisions of this standard. None of these fields are to be used at this revision level. If any of these fields are present, they are to be ignored.

19.1.29 Fields 14.200-998: User-defined fields (UDF)

These fields are user-definable fields. Their size and content shall be defined by the user and be in accordance with the receiving agency. If present they shall contain ASCII textual information.

19.1.30 Field 14.999: Image data (DATA)

This mandatory field shall contain all of the data from a captured tenprint image. It shall always be assigned field number 999 and must be the last physical field in the record. The field number designation "14.999:" is followed by the image data in a binary representation.

Each pixel of uncompressed grayscale data shall normally be quantized to eight bits (256 gray levels) contained in a single byte. If the entry in BPX Field 14.012 is greater than “8”, the number of bytes required to contain a pixel will be different. If compression is used, the pixel data shall be compressed in accordance with the compression technique specified in the CGA field.

19.2 End of Type-14 variable-resolution fingerprint image record

For the sake of consistency, immediately following the last byte of data from field 14.999 an *“FS”* separator shall be used to separate it from the next logical record. This separator must be included in the length field of the Type-14 record.

19.3 Additional variable-resolution fingerprint image records

Additional Type-14 records may be included in the file. For each additional fingerprint image, a complete Type-14 logical record together with the *“FS”* separator is required.

20 Type-15 variable-resolution palmprint image record

The Type-15 tagged-field logical record shall contain and be used to exchange palmprint image data together with fixed and user-defined textual information fields pertinent to the digitized image. Information regarding the scanning resolution used, the image size, and other parameters or comments required to process the image are recorded as tagged fields within the record. Palmprint images transmitted to other agencies will be processed by the recipient agencies to extract the desired feature information required for matching purposes.

The image data shall be acquired directly from a subject using a live-scan device, a palmprint card, a major case print card, or other media that contains the subject's palmprints.

Any method used to acquire the palmprint images shall be capable of capturing a set of images for each hand. This set shall include the writer's palm as a single scanned image, and the entire area of the full palm extending from the wrist bracelet to the tips of the fingers as one or two scanned images. If two images are used to represent the full palm, the lower image shall extend from the wrist bracelet to the top of the interdigital area (third finger joint) and shall include the thenar, and hypothenar areas of the palm. The upper image shall extend from the bottom of the interdigital area to the upper tips of the fingers. This provides an adequate amount of overlap between the two images. The standard also has provision for encoding the interdigital, thenar, and hypothenar areas separately for each palm. By matching the ridge structure and details contained in this common area, an examiner can confidently state that both images came from the same palm.

As a palmprint transaction may be used for different purposes, it may contain one or more unique image areas recorded from the palm or hand. A complete palmprint record set for one individual will normally include the writer's palm and the full palm image(s) from each hand. Since a tagged-field logical image record may contain only one binary field, a single Type-15 record will be required for each writer's palm and one to three Type-15 records for each full palm. Therefore, four to eight Type-15 records will be required to represent the subject's palmprints in a normal palmprint transaction.

20.1 Fields for the Type-15 logical record

The following paragraphs describe the data contained in each of the fields for the Type-15 logical record.

Within a Type-15 logical record, entries shall be provided in numbered fields as illustrated in Table 34. It is required that the first two fields of the record are ordered, and the field containing the image data shall be the last physical field in the record.

For each field of the Type-15 record, Table 34 lists the "condition code" as being mandatory "M" or optional "O", the field number, the field name, character type, field size, and occurrence limits. Based on a three digit field number, the maximum byte count size for the field is given in the last column. As more digits are used for the field number, the maximum byte count will also increase. The two entries in the "field size per occurrence" include all character separators used in the field. The "maximum byte count" includes the field number, the information, and all the character separators including the *"GS"* character.

20.1.1 Field 15.001: Logical record length (LEN)

This mandatory ASCII field shall contain the total count of the number of bytes in the Type-15 logical record. Field 15.001 shall specify the length of the record including every character of every field contained in the record and the information separators.

Table 34 Type-15 Variable-resolution palmprint record layout

Ident	Cond code	Field number	Field name	Char type	Field size per occurrence		Occur count		Max byte count
					Min	max	min	max	
LEN	M	15.001	LOGICAL RECORD LENGTH	N	4	8	1	1	15
IDC	M	15.002	IMAGE DESIGNATION CHARACTER	N	2	5	1	1	12
IMP	M	15.003	IMPRESSION TYPE	N	2	2	1	1	9
SRC	M	15.004	SOURCE AGENCY / ORI	AN	10	36	1	1	43
PCD	M	15.005	PALMPRINT CAPTURE DATE	N	9	9	1	1	16
HLL	M	15.006	HORIZONTAL LINE LENGTH	N	4	5	1	1	12
VLL	M	15.007	VERTICAL LINE LENGTH	N	4	5	1	1	12
SLC	M	15.008	SCALE UNITS	N	2	2	1	1	9
HPS	M	15.009	HORIZONTAL PIXEL SCALE	N	2	5	1	1	12
VPS	M	15.010	VERTICAL PIXEL SCALE	N	2	5	1	1	12
CGA	M	15.011	COMPRESSION ALGORITHM	AN	4	6	1	1	14
BPX	M	15.012	BITS PER PIXEL	N	2	3	1	1	10
PLP	M	15.013	PALMPRINT POSITION	N	3	3	1	1	10
RSV		15.014 - 15.015	RESERVED FOR FUTURE DEFINITION	--	--	--	--	--	--
SHPS	O	15.016	SCANNED HORIZONTAL PIXEL SCALE	N	2	5	0	1	12
SVPS	O	15.017	SCANNED VERTICAL PIXEL SCALE	N	2	5	0	1	12
RSV		15.018 - 15.019	RESERVED FOR FUTURE DEFINITION	--	--	--	--	--	--
COM	O	15.020	COMMENT	AN	2	128	0	1	135
RSV		15.021 - 15.023	RESERVED FOR FUTURE DEFINITION	--	--	--	--	--	--
PQM	O	15.024	PALMPRINT QUALITY METRIC	N	13	38	0	4	159
RSV		15.025 - 15.029	RESERVED FOR FUTURE DEFINITION	--	--	--	--	--	--
DMM	O	15.030	DEVICE MONITORING MODE	A	8	11	0	1	18
RSV		15.031 - 15.199	RESERVED FOR FUTURE DEFINITION	--	--	--	--	--	--
UDF	O	15.200 - 15.998	USER-DEFINED FIELDS	--	--	--	--	--	--
DATA	M	15.999	IMAGE DATA	B	2	--	1	1	--

Key for character type: N = Numeric; A = Alphabetic; AN = Alphanumeric; B = Binary

20.1.2 Field 15.002: Image designation character (IDC)

This mandatory ASCII field shall be used to identify the palmprint image data contained in the record. This IDC shall match the IDC found in the file content (CNT) field of the Type-1 record.

20.1.3 Field 15.003: Impression type (IMP)

This mandatory one- or two-byte ASCII field shall indicate the manner by which the palmprint image information was obtained. The appropriate code choice selected from Table 11 for palm shall be entered in this field.

20.1.4 Field 15.004: Source agency / ORI (SRC)

This mandatory ASCII field shall contain the identification of the administration or organization that originally captured the palmprint image contained in the record. Normally, the ORI of the agency that captured the image will be contained in this field. The SRC may contain up to 36 identifying characters and the data content of this field shall be defined by the user and be in accordance with the receiving agency.

20.1.5 Field 15.005: Palmprint capture date (PCD)

This mandatory ASCII field shall contain the date that the palmprint image contained in the record was captured. The date shall appear as eight digits in the format *YYYYMMDD*. The *YYYY* characters shall represent the year the image was captured; the *MM* characters shall be the tens and units values of the month; and the *DD* characters shall be the tens and units values of the day in the month. For example, 20040229 represents February 29, 2004. The complete date must be a legitimate date.

20.1.6 Field 15.006: Horizontal line length (HLL)

This mandatory ASCII field shall contain the number of pixels contained on a single horizontal line of the transmitted image.

20.1.7 Field 15.007: Vertical line length (VLL)

This mandatory ASCII field shall contain the number of horizontal lines contained in the transmitted image.

20.1.8 Field 15.008: Scale units (SLC)

This mandatory ASCII field shall specify the units used to describe the image sampling frequency (pixel density). A "1" in this field indicates pixels per inch, or a "2" indicates pixels per centimeter. A "0" in this field indicates no scale is given. For this case, the quotient of HPS/VPS gives the pixel aspect ratio.

20.1.9 Field 15.009: Horizontal pixel scale (HPS)

This mandatory ASCII field shall specify the integer pixel density used in the horizontal direction of the transmitted image providing the SLC contains a "1" or a "2". Otherwise, it indicates the horizontal component of the pixel aspect ratio.

20.1.10 Field 15.010: Vertical pixel scale (VPS)

This mandatory ASCII field shall specify the integer pixel density used in the vertical direction of the transmitted image providing the SLC contains a "1" or a "2". Otherwise, it indicates the vertical component of the pixel aspect ratio.

20.1.11 Field 15.011: Compression algorithm (CGA)

This mandatory ASCII field shall specify the algorithm used to compress the transmitted grayscale images. An entry of "NONE" in this field indicates that the data contained in this record is uncompressed. For those images that are to be compressed, this field shall contain the code from Table 1 to indicate the compression method used for this record type. The preferred methods for the compression of palmprint images are WSQ for those images scanned or transmitted at 500 ppi or JPEG 2000 for those images scanned and transmitted at 1000 ppi. See Section 5.6.1. and the *Profile for 1000 ppi Fingerprint Compression* for additional information on the usage of JPEG 2000 for the compression of fingerprint images. The domain registrar maintains a registry of acceptable compression techniques and corresponding codes that may be used as they become available.

20.1.12 Field 15.012: Bits per pixel (BPX)

This mandatory ASCII field shall contain the number of bits used to represent a pixel. This field shall contain an entry of “8” for normal grayscale values of “0” to “255”. Any entry in this field greater than “8” shall represent a grayscale pixel with increased precision.

20.1.13 Field 15.013: Palmprint position (PLP)

This mandatory tagged field shall contain the palmprint position that matches the palmprint image. The decimal code number corresponding to the known or most probable palmprint position shall be taken from Table 35 and entered as a two-character ASCII subfield.

20.1.14 Field 15.014-015: Reserved for future definition (RSV)

These fields are reserved for definition and inclusion in future revisions of this standard. None of these fields are to be used at this revision level. If any of these fields are present, they are to be ignored.

20.1.15 Field 15.016: Scanned horizontal pixel scale (SHPS)

This optional ASCII field shall specify the horizontal pixel density used for the scanning of the original impression providing the SLC field contains a "1" or a "2". Otherwise, it indicates the horizontal component of the pixel aspect ratio.

20.1.16 Field 15.017: Scanned vertical pixel scale (SVPS)

This optional ASCII field shall specify the vertical pixel density used for the scanning of the original impression providing the SLC field contains a "1" or a "2". Otherwise, it indicates the vertical component of the pixel aspect ratio.

20.1.17 Field 15.018-019: Reserved for future definition (RSV)

These fields are reserved for definition and inclusion in future revisions of this standard. None of these fields are to be used at this revision level. If any of these fields are present, they are to be ignored.

20.1.18 Field 15.020: Comment (COM)

This optional field may be used to insert comments or other ASCII text information with the palmprint image data.

20.1.19 Field 15.021-023: Reserved for future definition (RSV)

These fields are reserved for definition and inclusion in future revisions of this standard. None of these fields are to be used at this revision level. If any of these fields are present, they are to be ignored.

20.1.20 Field 15.024: Palmprint quality metric (PQM)

This optional ASCII field is used to specify one or more different metrics of palm image quality score data for the image stored in this record. The meaning attributed to this metric must be defined and interpreted by the producer of the scoring algorithm or by the person or system used to assign the metric to the palm print image. The metric may be a predictor of AFIS matcher accuracy performance or a different metric to indicate a value associated with the quality of the palm print image for a particular function.

This field may contain one or more subfields, each consisting of four information items. The first information item is the palm code as chosen from Table 35.

The other three items identify a quality score and the algorithm used to create the quality score. This information is useful to enable the recipient of the quality score to differentiate between quality scores generated by different algorithms and adjust for any differences in processing or analysis as necessary.

- The second information item shall be a quantitative expression of the predicted matching performance of the biometric sample. This item contains the ASCII representation of the integer image quality score between 0 and 100 assigned to the image data by a quality algorithm. Higher values indicate better quality. An entry of “255” shall indicate a failed attempt to calculate a quality score. An entry of “254” shall indicate that no attempt to calculate a quality score was made. The use of additional values to convey other information should be harmonized with ISO/IEC 19794 standards.

- The third information item shall specify the ID of the vendor of the quality algorithm used to calculate the quality score. This 4-digit hex value is assigned by IBIA and expressed as four ASCII characters. The IBIA shall maintain the Vendor Registry of CBEFF Biometric Organizations that will map the value in this field to a registered organization.

- The fourth information item shall specify a numeric product code assigned by the vendor of the quality algorithm, which may be registered with the IBIA, but registration is not required. It indicates which of the vendor’s algorithms was used in the calculation of the quality score. This field contains the ASCII representation of the integer product code and should be within the range 1 to 65535.

This subfield is repeated for each quality algorithm used, separated by the “RS” character.

20.1.21 Field 15.025-029: Reserved for future definition (RSV)

These fields are reserved for definition and inclusion in future revisions of this standard. None of these fields are to be used at this revision level. If any of these fields are present, they are to be ignored.

Table 35 Palm codes and dimensions

Palm Position	Palm code	Width (mm)	(in)	Height (mm)	(in)
Unknown Palm	20	139.7	5.5	203.2	8.0
Right Full Palm	21	139.7	5.5	203.2	8.0
Right Writer's Palm	22	44.5	1.8	127.0	5.0
Left Full Palm	23	139.7	5.5	203.2	8.0
Left Writer's Palm	24	44.5	1.8	127.0	5.0
Right Lower Palm	25	139.7	5.5	139.7	5.5
Right Upper Palm	26	139.7	5.5	139.7	5.5
Left Lower Palm	27	139.7	5.5	139.7	5.5
Left Upper Palm	28	139.7	5.5	139.7	5.5
Right Other	29	139.7	5.5	203.2	8.0
Left Other	30	139.7	5.5	203.2	8.0
Right Interdigital	31	139.7	5.5	76.2	3.0
Right Thenar	32	76.2	3.0	114.3	4.5
Right Hypothenar	33	76.2	3.0	114.3	4.5
Left Interdigital	34	139.7	5.5	76.2	3.0
Left Thenar	35	76.2	3.0	114.3	4.5
Left Hypothenar	36	76.2	3.0	114.3	4.5

20.1.22 Field 15.030: Device monitoring mode (DMM)

This optional field provides information describing the level of human monitoring for the image capture device. This field will contain an entry from Table 27 to indicate the monitoring mode of the biometric sample capture device.

20.1.23 Field 15.031-199: Reserved for future definition (RSV)

These fields are reserved for definition and inclusion in future revisions of this standard. None of these fields are to be used at this revision level. If any of these fields are present, they are to be ignored.

20.1.24 Fields 15.200-998: User-defined fields (UDF)

These fields are user-definable fields. Their size and content shall be defined by the user and be in accordance with the receiving agency. If present they shall contain ASCII textual information.

20.1.25 Field 15.999: Image data (DATA)

This mandatory field shall contain all of the data from a captured palmprint image. It shall always be assigned field number 999 and must be the last physical field in the record. The field number designation "15.999:" is followed by the image data in a binary representation.

Each pixel of uncompressed grayscale data shall normally be quantized to eight bits (256 gray levels) contained in a single byte. If the entry in BPX Field 15.012 is greater than 8, the number of bytes required to contain a pixel will be different. If compression is used, the pixel data shall be compressed in accordance with the compression technique specified in the CGA field.

20.2 End of Type-15 variable-resolution palmprint image record

For the sake of consistency, immediately following the last byte of data from field 15.999 an *"FS"* separator shall be used to separate it from the next logical record. This separator must be included in the length field of the Type-15 record.

20.3 Additional Type-15 variable-resolution palmprint image records

Additional Type-15 records may be included in the file. For each additional palmprint image, a complete Type-15 logical record together with the *"FS"* separator is required.

21 Type-16 user-defined testing image record

The Type-16 tagged-field logical record shall contain and be used to exchange image data together with textual information fields pertinent to the digitized image. This logical record type allows the standard to provide the ability to exchange images not addressed by other record types in the standard. It is intended as the tagged-field user-defined logical record to be used for developmental or test purposes.

The image data contained in the Type-16 logical record may be in a compressed form. With the exception of the tagged fields described below, the format, parameters, and types of images to be exchanged are undefined by this Standard and shall be agreed upon between the sender and recipient.

21.1 Fields for the Type-16 logical record

The following paragraphs describe the data contained in each of the fields for the Type-16 logical record.

Within a Type-16 logical record, entries shall be provided in tagged numbered fields as described below. The logical record length, and the IDC must be provided as the first two ordered tagged fields with the image data contained in the last physical field of the record. Fields describing the physical parameters of the image size and resolution are mandatory and must also be provided. These fields and the remaining user-defined fields may be unordered.

For each required field of the Type-16 record, Table 36 lists the "condition code" as being mandatory "M" or optional "O", the field number, the field name, character type, field size, and occurrence limits. Based on a three digit field number, the maximum byte count size for the field is given in the last column. As more digits are used for the field number, the maximum byte count will also increase. The two entries in the "field size per occurrence" include all character separators used in the field. The "maximum byte count" includes the field number, the information, and all the character separators including the *"GS"* character.

21.1.1 Field 16.001: Logical record length (LEN)

This mandatory ASCII field shall contain the total count of the number of bytes in the Type-16 logical record. Field 16.001 shall specify the length of the record including every character of every field contained in the record and the information separators.

Table 36 Type-16 Variable-resolution user-defined testing image record layout

Ident	Cond code	Field number	Field name	Char type	Field size per occurrence		Occur count		Max byte count
					Min	max	Min	Max	
LEN	M	16.001	LOGICAL RECORD LENGTH	N	4	8	1	1	15
IDC	M	16.002	IMAGE DESIGNATION CHARACTER	N	2	5	1	1	12
UDI	M	16.003	USER-DEFINED IMAGE	AN	2	36	1	1	43
SRC	M	16.004	SOURCE AGENCY / ORI	AN	10	36	1	1	43
UTD	M	16.005	USER-DEFINED TESTING DATE	N	9	9	1	1	16
HLL	M	16.006	HORIZONTAL LINE LENGTH	N	4	5	1	1	12
VLL	M	16.007	VERTICAL LINE LENGTH	N	4	5	1	1	12
SLC	M	16.008	SCALE UNITS	N	2	2	1	1	9
HPS	M	16.009	HORIZONTAL PIXEL SCALE	N	2	5	1	1	12
VPS	M	16.010	VERTICAL PIXEL SCALE	N	2	5	1	1	12
CGA	M	16.011	COMPRESSION ALGORITHM	AN	4	6	1	1	14
BPX	M	16.012	BITS PER PIXEL	N	2	3	1	1	10
CSP	O	16.013	COLOR SPACE	A	4	5	0	1	12
RSV		16.014 - 16.015	RESERVED FOR FUTURE DEFINITION	--	--	--	--	--	--
SHPS	O	16.016	SCANNED HORIZONTAL PIXEL SCALE	N	2	5	0	1	12
SVPS	O	16.017	SCANNED VERTICAL PIXEL SCALE	N	2	5	0	1	12
RSV		16.018 - 16.019	RESERVED FOR FUTURE DEFINITION	--	--	--	--	--	--
COM	O	16.020	COMMENT	AN	2	128	0	1	135
RSV		16.021 - 16.023	RESERVED FOR FUTURE DEFINITION	--	--	--	--	--	--
UQS	O	16.024	USER-DEFINED TESTING IMAGE QUALITY SCORE	ANS	8	35	0	1	42
RSV		16.025 - 16.029	RESERVED FOR FUTURE DEFINITION	--	--	--	--	--	--
DMM	O	16.030	DEVICE MONITORING MODE	A	8	11	0	1	18
RSV		16.031 - 16.199	RESERVED FOR FUTURE DEFINITION	--	--	--	--	--	--
UDF	O	16.200 - 16.998	USER-DEFINED FIELDS	--	--	--	--	--	--
DATA	M	16.999	IMAGE DATA	B	2	--	1	1	--

Key for character type: N = Numeric; A = Alphabetic; AN = Alphanumeric; B = Binary

21.1.2 Field 16.002: Image designation character (IDC)

This mandatory ASCII field shall be used to identify the user-defined testing image data contained in the record. This IDC shall match the IDC found in the file content (CNT) field of the Type-1 record.

21.1.3 Fields 16.003: User-defined image (UDI)

This mandatory field shall contain the type of user-defined image contained in this record. Its content shall be defined by the user and be in accordance with the receiving agency.

21.1.4 Field 16.004: Source agency / ORI (SRC)

This mandatory ASCII field shall contain the identification of the administration or organization that originally captured the user-defined testing image contained in the record. Normally, the ORI of the agency that captured the image will be contained in this field. The SRC may contain up to 36 identifying characters and the data content of this field shall be defined by the user and be in accordance with the receiving agency.

21.1.5 Field 16.005: User-defined testing date (UTD)

This mandatory ASCII field shall contain the date that the user-defined testing image contained in the record was captured. The date shall appear as eight digits in the format *YYYYMMDD*. The *YYYY* characters shall represent the year the image was captured; the *MM* characters shall be the tens and units values of the month; and the *DD* characters shall be the tens and units values of the day in the month. For example, 20040229 represents February 29, 2004. The complete date must be a legitimate date.

21.1.6 Field 16.006: Horizontal line length (HLL)

This mandatory ASCII field shall contain the number of pixels contained on a single horizontal line of the transmitted image.

21.1.7 Field 16.007: Vertical line length (VLL)

This mandatory ASCII field shall contain the number of horizontal lines contained in the transmitted image.

21.1.8 Field 16.008: Scale units (SLC)

This mandatory ASCII field shall specify the units used to describe the image sampling frequency (pixel density). A "1" in this field indicates pixels per inch, or a "2" indicates pixels per centimeter. A "0" in this field indicates no scale is given. For this case, the quotient of HPS/VPS gives the pixel aspect ratio.

21.1.9 Field 16.009: Horizontal pixel scale (HPS)

This mandatory ASCII field shall specify the integer pixel density used in the horizontal direction of the transmitted image providing the SLC contains a "1" or a "2". Otherwise, it indicates the horizontal component of the pixel aspect ratio.

21.1.10 Field 16.010: Vertical pixel scale (VPS)

This mandatory ASCII field shall specify the integer pixel density used in the vertical direction of the transmitted image providing the SLC contains a "1" or a "2". Otherwise, it indicates the vertical component of the pixel aspect ratio.

21.1.11 Field 16.011: Compression algorithm (CGA)

This mandatory ASCII field shall specify the algorithm used to compress the transmitted images. An entry of "NONE" in this field indicates that the data contained in this record is uncompressed. For those images that are to be compressed, this field shall contain the code from Table 1 to indicate the compression method used for this record type.

21.1.12 Field 16.012: Bits per pixel (BPX)

This mandatory ASCII field shall contain the number of bits used to represent a pixel. This field shall contain an entry of “8” for normal grayscale values of “0” to “255”. Any entry in this field greater than “8” shall represent a grayscale pixel with increased precision.

21.1.13 Field 16.013: Color space (CSP)

This optional ASCII field shall contain an entry from Table 3 to identify the color space used to exchange the image data. If the color space for an RGB image cannot be determined, an entry of "RGB" shall be entered in field 16.013. The description for field 10.012 as described in Section 15.1.12 contains additional information on the color space field.

21.1.14 Field 16.014-015: Reserved for future definition (RSV)

These fields are reserved for definition and inclusion in future revisions of this standard. None of these fields are to be used at this revision level. If any of these fields are present, they are to be ignored.

21.1.15 Field 16.016: Scanned horizontal pixel scale (SHPS)

This optional ASCII field shall specify the horizontal pixel density used for the scanning of the original impression providing the SLC field contains a "1" or a "2". Otherwise, it indicates the horizontal component of the pixel aspect ratio.

21.1.16 Field 16.017: Scanned vertical pixel scale (SVPS)

This optional ASCII field shall specify the vertical pixel density used for the scanning of the original impression providing the SLC field contains a "1" or a "2". Otherwise, it indicates the vertical component of the pixel aspect ratio.

21.1.17 Field 16.018-019: Reserved for future definition (RSV)

These fields are reserved for definition and inclusion in future revisions of this standard. None of these fields are to be used at this revision level. If any of these fields are present, they are to be ignored.

21.1.18 Field 16.020: Comment (COM)

This optional field may be used to insert comments or other ASCII text information with the user-defined testing image data.

21.1.19 Field 16.021-023: Reserved for future definition (RSV)

These fields are reserved for definition and inclusion in future revisions of this standard. None of these fields are to be used at this revision level. If any of these fields are present, they are to be ignored.

21.1.20 Field 16.024: User-defined testing image quality score (UQS)

This optional ASCII field shall specify a quality score data for the user-defined testing image stored in this record. Each subfield shall contain three information items separated by the "US" separator character. They identify a quality score and the algorithm used to create the quality score. This information is useful to enable the recipient of the quality score to differentiate between quality scores generated by different algorithms and adjust for any differences in processing or analysis as necessary.

1. The first information item shall be a quantitative expression of the predicted matching performance of the biometric sample. This item contains the ASCII representation of the integer image quality score between 0 and 100 assigned to the image data by a quality algorithm. Higher values indicate better quality. An entry of “255” shall indicate a failed attempt to calculate a quality score. An entry of “254” shall indicate that no attempt to calculate a quality score was made. The use of additional values to convey other information should be harmonized with ISO/IEC 19794 standards.

2. The second information item shall specify the ID of the vendor of the quality algorithm used to calculate the quality score. This 4-digit hex value is assigned by IBIA and expressed as four ASCII characters. The IBIA shall maintain the Vendor Registry of CBEFF Biometric Organizations that will map the value in this field to a registered organization.

3. The third information item shall specify a numeric product code assigned by the vendor of the quality algorithm, which may be registered with the IBIA, but registration is not required. It indicates which of the vendor’s algorithms was used in the calculation of the quality score. This field contains the ASCII representation of the integer product code and should be within the range 1 to 65535.

21.1.21 Field 16.025-029: Reserved for future definition (RSV)

These fields are reserved for definition and inclusion in future revisions of this standard. None of these fields are to be used at this revision level. If any of these fields are present, they are to be ignored.

21.1.22 Field 16.030: Device monitoring mode (DMM)

This optional field provides information describing the human monitoring operation of the image capture device. This field will contain an entry from Table 27 to indicate the monitoring mode of the biometric sample capture device.

21.1.23 Field 16.031-199: Reserved for future definition (RSV)

These fields are reserved for definition and inclusion in future revisions of this standard. None of these fields are to be used at this revision level. If any of these fields are present, they are to be ignored.

21.1.24 Fields 16.200-998: User-defined fields (UDF)

These fields are user-definable fields. Their size and content shall be defined by the user and be in accordance with the receiving agency. If present they shall contain ASCII textual information.

21.1.25 Field 16.999: Image data (DATA)

This mandatory field shall contain all of the pixel data from a captured image. It shall always be assigned field number 999 and must be the last physical field in the record. For example, "16.999:" is followed by image data in a binary representation.

21.2 End of Type-16 user-defined testing image record

For the sake of consistency, immediately following the last byte of data from field 16.999 an *"FS"* separator shall be used to separate it from the next logical record. This separator must be included in the length field of the Type-16 record.

21.3 Additional Type-16 user-defined testing image records

Additional Type-16 records may be included in the file. For each additional image, a complete Type-16 logical record together with the *"FS"* separator is required.

22 Type-17 Iris image record

22.1 General

The Type-17 tagged-field logical record shall contain and be used to exchange generic iris image data using mandatory fields of this record type. Optional fields may be used to exchange additional information available in the INCITS 379-2004 – Iris Image Interchange Format standard and the ISO/IEC 19794-6 iris image data interchange format standard. Images may be monochrome or color with 256 or more intensity levels (grey or per-color component), and vary in size depending on field of view and compression.

The iris standards specify two alternative image interchange formats for biometric authentication systems that utilize iris recognition. The first, which is represented in this record type, is based on a rectilinear image storage format that specifies a raw, uncompressed or compressed array of intensity values. The second is an image data format based on a polar image specification and is not represented in this logical record type. If such a polar representation is required for a specific application, a Type-99 CBEFF biometric data record may be used.

22.2 Fields for the Type-17 logical record

The following paragraphs describe the data contained in each of the fields for the Type-17 logical record.

Within a Type-17 logical record, entries shall be provided in numbered fields as illustrated in Table 37. It is required that the first two fields of the record are ordered, and the field containing the iris binary data shall be the last physical field in the record.

For each field of the Type-17 record, Table 37 lists the "condition code" as being mandatory "M" or optional "O", the field number, the field name, character type, field size, and occurrence limits. Based on a three-digit field number, the maximum byte count size for the field is given in the last column. As more digits are used for the field number, the maximum byte count will also increase.

The two entries in the “field size per occurrence” include all character separators used in the field. The “maximum byte count” includes the field number, the information, and all the character separators including the *“GS”* character.

Table 37 Type-17 Iris image record layout

Ident	Cond code	Field number	Field name	Char type	Field size per occurrence		Occur count		Max byte count
					Min	max	Min	Max	
LEN	M	17.001	LOGICAL RECORD LENGTH	N	4	8	1	1	15
IDC	M	17.002	IMAGE DESIGNATION CHARACTER	N	2	5	1	1	12
FID	M	17.003	FEATURE IDENTIFIER	N	2	2	1	1	9
SRC	M	17.004	SOURCE AGENCY/ORI	AN	10	36	1	1	43
ICD	M	17.005	IRIS CAPTURE DATE	N	9	9	1	1	16
HLL	M	17.006	HORIZONTAL LINE LENGTH	N	4	5	1	1	12
VLL	M	17.007	VERTICAL LINE LENGTH	N	4	5	1	1	12
SLC	M	17.008	SCALE UNITS	N	2	2	1	1	9
HPS	M	17.009	HORIZONTAL PIXEL SCALE	N	2	5	1	1	12
VPS	M	17.010	VERTICAL PIXEL SCALE	N	2	5	1	1	12
CGA	M	17.011	COMPRESSION ALGORITHM	AN	4	6	1	1	14
BPX	M	17.012	BITS PER PIXEL	N	2	3	1	1	10
CSP	M	17.013	COLOR SPACE	A	4	5	1	1	12
RAE	O	17.014	ROTATION ANGLE OF EYE	AN	2	5	0	1	12
RAU	O	17.015	ROTATION UNCERTAINTY	AN	2	5	0	1	12
IPC	O	17.016	IMAGE PROPERTY CODE	N	6	6	0	1	13
DUI	O	17.017	DEVICE UNIQUE IDENTIFIER	ANS	17	17	0	1	24
GUI	O	17.018	GLOBAL UNIQUE IDENTIFIER	AN	17	17	0	1	24
MMS	O	17.019	MAKE/MODEL/SERIAL NUMBER	ANS	6	153	0	1	160
ECL	O	17.020	EYE COLOR	A	4	4	0	1	11
COM	O	17.021	COMMENT	AN	2	128	0	1	135
SHPS	O	17.022	SCANNED HORIZONTAL PIXEL SCALE	N	2	5	0	1	12
SVPS	O	17.023	SCANNED VERTICAL PIXEL SCALE	N	2	5	0	1	12
IQS	O	17.024	IMAGE QUALITY SCORE	ANS	8	35	0	1	42
ALS	O	17.025	ACQUISITION LIGHTING SPECTRUM	A	3	3	0	1	10
IRD	O	17.026	IRIS DIAMETER	N	1	5	0	1	12
RSV	O	17.027 - 17.029	RESERVED FOR FUTURE DEFINITION	--	--	--	--	--	--

Ident	Cond code	Field number	Field name	Char type	Field size per occurrence		Occur count		Max byte count
					Min	max	Min	Max	
DMM	O	17.030	DEVICE MONITORING MODE	A	8	11	0	1	18
RSV	O	17.031 - 17.199	RESERVED FOR FUTURE DEFINITION	--	--	--	--	--	--
UDF	O	17.200 - 17.998	USER-DEFINED FIELDS	--	--	--	--	--	--
DATA	M	17.999	IRIS IMAGE DATA	B	2	--	1	1	--

Key for character type: N = Numeric; A = Alphabetic; AN = Alphanumeric; B = Binary

22.2.1 Field 17.001: Logical record length (LEN)

This mandatory ASCII field shall contain the total count of the number of bytes in the Type-17 logical record. Field 17.001 shall specify the length of the record including every character of every field contained in the record and the information separators.

22.2.2 Field 17.002: Image designation character (IDC)

This mandatory ASCII field shall be used to identify the iris image data contained in the record. This IDC shall match the IDC found in the file content (CNT) field of the Type-1 record.

22.2.3 Field 17.003: Feature Identifier (FID)

This mandatory field shall contain an identifier for the eye represented by the image in the record. An entry of “0” in this field indicates that the image in this record is undefined. An entry of “1” in this field indicates that the image in this record is the subject's right eye. An entry of “2” in this field indicates that the image in this record is the subject's left eye.

22.2.4 Field 17.004: Source agency / ORI (SRC)

This mandatory ASCII field shall contain the identification of the administration or organization that originally captured the iris image contained in the record. Normally, the ORI of the agency that captured the image will be contained in this field. The SRC may contain up to 36 identifying characters and the data content of this field shall be defined by the user and be in accordance with the receiving agency.

22.2.5 Field 17.005: Iris capture date (ICD)

This mandatory ASCII field shall contain the date that the iris image contained in the record was captured. The date shall appear as eight digits in the format *YYYYMMDD*. The *YYYY* characters shall represent the year the image was captured; the *MM* characters shall be the tens and units values of the month; and the *DD* characters shall be the tens and units values of the day in the month. For example, 20040229 represents February 29, 2004. The complete date must be a legitimate date.

22.2.6 Field 17.006: Horizontal line length (HLL)

This mandatory ASCII field shall contain the number of pixels contained on a single horizontal line of the transmitted image.

22.2.7 Field 17.007: Vertical line length (VLL)

This mandatory ASCII field shall contain the number of horizontal lines contained in the transmitted image.

22.2.8 Field 17.008: Scale units (SLC)

This mandatory ASCII field shall specify the units used to describe the image sampling frequency (pixel density). A "1" in this field indicates pixels per inch, or a "2" indicates pixels per centimeter. A "0" in this field indicates no scale is given. For this case, the quotient of HPS/VPS gives the pixel aspect ratio.

22.2.9 Field 17.009: Horizontal pixel scale (HPS)

This mandatory ASCII field shall specify the integer pixel density used in the horizontal direction of the transmitted image providing the SLC contains a "1" or a "2". Otherwise, it indicates the horizontal component of the pixel aspect ratio.

22.2.10 Field 17.010: Vertical pixel scale (VPS)

This mandatory ASCII field shall specify the integer pixel density used in the vertical direction of the transmitted image providing the SLC contains a "1" or a "2". Otherwise, it indicates the vertical component of the pixel aspect ratio.

22.2.11 Field 17.011 Compression algorithm (CGA)

This mandatory ASCII field shall specify the algorithm used to compress the color or grayscale image. Table 1 contains the codes for the compression methods. An entry of "NONE" in this field indicates that the data contained in this record is uncompressed. The image shall be represented as an array of n rows by m columns by at least 8-bit pixels. Each pixel in a monochrome image shall be represented by eight or more bits. Color images shall be represented as a sequential sample of a red, green, and blue intensity for each pixel. The image shall be organized in row-major order, with the lowest address corresponding to the upper left corner of the image.

For those images that are to be compressed, the method for the compression of iris images is specified by the baseline mode of the JPEG algorithm or JPEG 2000. For best results, the compression ratio should not exceed 6:1.

22.2.12 Field 17.012: Bits per pixel (BPX)

This mandatory ASCII field shall contain the number of bits used to represent a pixel. This field shall contain an entry of “8” for normal grayscale values of “0” to “255” or each RGB color component. Any entry in this field greater than “8” shall represent a grayscale or color pixel component with increased precision.

22.2.13 Field 17.013: Color Space (CSP)

This mandatory ASCII field shall contain an entry from Table 3 to identify the color space used to exchange the image data. If the color space for an RGB image cannot be determined, an entry of

"RGB" shall be entered in field 17.013. The description for field 10.012 contains additional information on the color space field.

22.2.14 Field 17.014: Rotation Angle of Eye (RAE)

This optional field shall indicate the rotation angle of the eye. For rectilinear images, rotation angle = round (65536 * angle / 360) modulo 65536. The angle is measured in degrees from horizontal to the interpupillary line. The value “FFFF” indicates rotation angle of eye is undefined.

22.2.15 Field 17.015: Rotation Uncertainty (RAU)

This optional field shall indicate the rotation uncertainty. The rotation uncertainty is equal to [round (65536 * uncertainty / 180)]. The uncertainty is measured in degrees and is the absolute value of maximum error. The value “FFFF” indicates uncertainty is undefined.

22.2.16 Field 17.016: Image Property Code (IPC)

This optional field shall contain the image property code. It shall contain three information items. The first information item shall indicate the specific horizontal orientation. The second information item shall indicate the specific vertical orientation. The third information item shall indicate the specific scan type. Each information item shall be one character and be separated from the next by the “US” separator character.

- Values for Horizontal Orientation shall be one of: “0” for Undefined, “1” for Base, or “2” for Flipped. “Base” orientation refers to images corresponding to the view facing the subject, where the nasal side of subject’s left eye or outer edge of the subject’s right eye is on the left side the of image. “Flipped” orientation refers to images where the orientation is opposite from that described for “Base”.

- Values for Vertical Orientation shall be one of: “0” for Undefined, “1” for Base, or “2” for Flipped. “Base” orientation refers to images where the superior (top) edge of the eye is at the top of the image. “Flipped” orientation refers to images where the orientation is opposite from that described for “Base”.

- Values for Scan Type shall be one of: “0” for Undefined, “1” for Progressive, “2” for Interlace Frame, or “3” for Interlace Field. “Progressive” indicates that the image was captured using progressive scanning, in which case all image lines are generated sequentially. “Interlace Frame” indicates that the image was captured using interlaced scanning, in which two fields are generated in sequence, the first composed of odd-numbered lines and the second of even-numbered lines. “Interlace Field” indicates that the image was captured using interlaced scanning, in which only one field is generated, and then each line is duplicated to produce a full size image.

22.2.17 Field 17.017: Device Unique Identifier (DUI)

This optional field shall contain a sixteen-byte string uniquely identifying the device or source of the data. This data can be one of: (1) Device Serial number, identified by the first character “D”, (2) Host PC Mac address, identified by the first character “M”, (3) Host PC processor ID, identified by the first character “P”, and (4) No serial number, identified by all zero’s.

22.2.18 Field 17.018: Global Unique Identifier (GUI)

This optional field shall contain a 16-byte string to indicate a GUID – a globally unique identifier.

22.2.19 Field 17.019: Make/Model/Serial Number (MMS)

This optional field contains the make, model and serial number for the iris capture device. It shall consist of three information items. The make of the iris capture device shall be the first information item followed by the “US” separator character, the model of the iris capture device, a “US” separator character, and the serial number of the iris capture device. Each information item shall be 1 to 50 characters. Any or all information items may indicate that information is unknown with the value “0”.

22.2.20 Field 17.020: Eye Color (ECL)

This optional field shall specify the subject's eye color. When used, this field shall contain an entry chosen from Table 23.

22.2.21 Field 17.021: Comment (COM)

This optional field may be used to insert comments or other ASCII text information with the iris image data.

22.2.22 Field 17.022: Scanned horizontal pixel scale (SHPS)

This optional ASCII field shall specify the horizontal pixel density used for scanning providing the SLC field contains a "1" or a "2". Otherwise, it indicates the horizontal component of the pixel aspect ratio.

22.2.23 Field 17.023: Scanned vertical pixel scale (SVPS)

This optional ASCII field shall specify the vertical pixel density used for scanning providing the SLC field contains a "1" or a "2". Otherwise, it indicates the vertical component of the pixel aspect ratio.

22.2.24 Field 17.024: Image Quality Score (IQS)

This optional ASCII field shall specify a quality score data for the iris image stored in this record. Each subfield shall contain three information items separated by the "US" separator character. They identify a quality score and the algorithm used to create the quality score. This information is useful to enable the recipient of the quality score to differentiate between quality scores generated by different algorithms and adjust for any differences in processing or analysis as necessary.

1. The first information item shall be a quantitative expression of the predicted matching performance of the biometric sample. This item contains the ASCII representation of the integer image quality score between 0 and 100 assigned to the image data by a quality algorithm. Higher values indicate better quality. An entry of “255” shall indicate a failed attempt to calculate a quality score. An entry of “254” shall indicate that no attempt to calculate a quality score was made. The use of additional values to convey other information should be harmonized with ISO/IEC 19794 standards.

2. The second information item shall specify the ID of the vendor of the quality algorithm used to calculate the quality score. This 4-digit hex value is assigned by IBIA and expressed as four ASCII characters. The IBIA shall maintain the Vendor Registry of CBEFF Biometric Organizations that will map the value in this field to a registered organization.

3. The third information item shall specify a numeric product code assigned by the vendor of the quality algorithm, which may be registered with the IBIA, but registration is not required. It

indicates which of the vendor's algorithms was used in the calculation of the quality score. This field contains the ASCII representation of the integer product code and should be within the range 1 to 65535. This subfield is repeated for each quality algorithm used, separated by the "RS" character.

22.2.25 Field 17.025: Acquisition Lighting Spectrum (ALS)

This optional field indicates the lighting spectrum used in capturing the iris image. Values shall be one of the following: "NIR" for near-infrared illumination (~700-850nm), "VIS" for visible full-spectrum illumination (~380-740nm), or "OTHER" for other illumination.

22.2.26 Field 17.026: Iris Diameter (IRD)

This optional field shall specify the expected iris diameter in pixels.

22.2.27 Field 17.027-029: Reserved for Future Definition (RSV)

These fields are reserved for definition and inclusion in future revisions of this standard. None of these fields are to be used at this revision level. If any of these fields are present, they are to be ignored.

22.2.28 Field 17.030: Device monitoring mode (DMM)

This optional field provides information describing the human monitoring operation of the image capture device. This field will contain an entry from Table 27 to indicate the monitoring mode of the biometric sample capture device.

22.2.29 Field 17.031-199: Reserved for Future Definition (RSV)

These fields are reserved for definition and inclusion in future revisions of this standard. None of these fields are to be used at this revision level. If any of these fields are present, they are to be ignored.

22.2.30 Field 17.200-998: User-Defined Fields (UDF)

These fields are user-definable fields. Their size and content shall be defined by the user and be in accordance with the receiving agency. If present, they shall contain ASCII textual information.

22.2.31 Field 17.999: Image data (DATA)

This mandatory field shall contain the iris image. It shall always be assigned field number 999 and must be the last physical field in the record.

22.3 End of Type-17 Iris Data Record

For the sake of consistency, immediately following the last byte of data from field 17.999 an *"FS"* separator shall be used to separate it from the next logical record. This separator must be included in the length field of the Type-17 record.

22.4 Additional Type-17 Iris Data Records

Additional Type-17 records may be included in the file. For each additional iris record, a complete Type-17 logical record together with the *"FS"* separator is required.

23 Type-99 CBEFF biometric data record

The Type-99 tagged-field logical record shall contain and be used to exchange biometric data that is not supported by other ANSI/NIST-ITL logical records. This data is exchanged in a format that conforms to INCITS 398-2005, the Common Biometric Exchange Formats Framework.

The CBEFF conformant Biometric Information Record (BIR) used by the Type-99 logical record includes a common Header and a Biometric Data Block (BDB). Two mandatory fields in the CBEFF Header are Format Owner and Format Type. The Format Owner field denotes the vendor, standards body, working group, or industry consortium that has defined the format of the biometric data (the data contained in the BDB). A CBEFF requirement is that format owners register with the IBIA for an assigned identifier of the format owner. The values used in the Format Type field are assigned by the format owner and represent a specific BDB format as specified by the format owner. This may be a non-standard, unpublished data format or a data format that has been standardized by an industry group, consortium, or standards body. It is the combined CBEFF Format Owner/Format Type value that uniquely identifies the BDB format.

The Type-99 logical record provides the CBEFF fields necessary for users to send, receive, and interpret biometric data in any registered BDB format (with the exception of biometric data which is exchanged using the other logical records in this standard). The data carried in the Biometric Data Block field (99.999) is the BDB. The format of that data is identified by the field's BDB Format Owner and BDB Format Type as described by the CBEFF standard.

23.1 Fields for the Type-99 logical record

The following paragraphs describe the data contained in each of the fields for the Type-99 logical record. Within a Type-99 logical record, entries shall be provided in numbered fields. It is required that the first two fields of the record are ordered, and the field containing the CBEFF formatted binary data shall be the last physical field in the record. For each field of the Type-99 record, Table 38 lists the “condition code” as being mandatory “M” or optional “O”, the field number, the field name, character type, field size, and occurrence limits. Based on a three-digit field number, the maximum byte count size for the field is given in the last column. As more digits are used for the field number, the maximum byte count will also increase. The two entries in the “field size per occurrence” include all character separators used in the field. The “maximum byte count” includes the field number, the information, and all the character separators including the *“GS”* character. Annex F provides an example that includes the Type-99 record.

23.1.1 Field 99.001: Logical Record Length (LEN)

This mandatory ASCII field shall contain the total count of the number of bytes in the Type-99 logical record. This field shall specify the length of the record including every character of every field contained in the record and the information separators.

23.1.2 Field 99.002: Image Designation Character (IDC)

This mandatory ASCII field shall be used to identify the CBEFF data contained in the record. This IDC shall match the IDC found in the file content (CNT) field of the Type-1 record.

23.1.3 Field 99.003: Reserved for Future Definition (RSV)

This field is reserved for inclusion in future revisions of this standard. It is not to be used at this revision level. If a present, it is to be ignored.

Table 38 Type-99 CBEFF biometric data record layout

Ident	Cond Code	Field Number	Field Name	Char Type	Field size per occurrence		Occur count		Max byte count
					min	max	min	max	
LEN	M	99.001	LOGICAL RECORD LENGTH	N	4	8	1	1	15
IDC	M	99.002	IMAGE DESIGNATION CHARACTER	N	2	5	1	1	12
RSV	O	99.003	RESERVED FOR FUTURE DEFINITION	--	--	--	--	--	--
SRC	M	99.004	SOURCE AGENCY / ORI	AN	10	36	1	1	43
BCD	M	99.005	BIOMETRIC CREATION DATE	N	16	16	1	1	23
RSV	O	99.006 - 99.099	RESERVED FOR FUTURE DEFINITION	--	--	--	--	--	--
HDV	M	99.100	CBEFF HEADER VERSION	N	5	5	1	1	12
BTY	M	99.101	BIOMETRIC TYPE	N	9	9	1	1	16
BDQ	O	99.102	BIOMETRIC DATA QUALITY	ANS	9	36	0	1	43
BFO	M	99.103	BDB FORMAT OWNER	AN	5	5	1	1	12
BFT	M	99.104	BDB FORMAT TYPE	AN	5	5	1	1	12
RSV	O	99.105 - 99.199	RESERVED FOR FUTURE DEFINITION	--	--	--	--	--	--
UDF	O	99.200 - 99.998	USER-DEFINED FIELDS	--	--	--	--	--	--
BDB	M	99.999	BIOMETRIC DATA BLOCK	B	2	--	1	1	--

Key for character type: N = Numeric; A = Alphabetic; AN = Alphanumeric; B = Binary

23.1.4 Field 99.004: Source agency/ORI (SRC)

This mandatory ASCII field shall contain the identification of the administration or organization that originally captured the biometric sample contained in the record. Normally, the ORI of the agency that captured the image will be contained in this field. The SRC may contain up to 36 identifying characters and the data content of this field shall be defined by the user and be in accordance with the receiving agency.

23.1.5 Field 99.005: Biometric creation date (BCD)

This mandatory ASCII field shall contain the date and time that the biometric sample was captured. The date and time shall appear as fifteen digits in the format YYYYMMDDhhmmssZ. The YYYY characters shall represent the year the image was captured; the MM characters shall be the tens and units values of the month; the DD characters shall be the tens and units values of the day in the month; the hh characters shall be the tens and units values of the hour of the day in 24-hour format; the mm characters shall be the tens and units values of the minute within the hour; the ss characters shall be the tens and units values of the second of the minute; and “Z” denotes Coordinated Universal Time, which is abbreviated UTC. For example, December 15, 2000 at 5 AM, 35 minutes and 30 seconds is expressed as 20001215053530Z. The complete date must be a legitimate date.

23.1.6 Field 99.006-099: Reserved for Future Definition (RSV)

These fields are reserved for inclusion in future revisions of this standard. None of these fields are to be used at this revision level. If any of these fields are present, they are to be ignored.

23.1.7 Field 99.100: CBEFF Header Version (HDV)

This mandatory ASCII field shall be used to identify the version of CBEFF specification that this record conforms to. The format is two characters for major version number followed by two characters for minor version. The current version of CBEFF is INCITS 398-2005 represented by the string ‘0101’ (major version ‘01’ and minor version ‘01’).

23.1.8 Field 99.101: Biometric Type (BTY)

This mandatory ASCII field shall be used to identify the type of biometric technology. This specification adopts the values presented in CBEFF with the addition of two leading zeros for future expansion. Table 39 lists the current biometric type codes.

Table 39 CBEFF Biometric type

Biometric Type Name	Biometric Type Code
No Information Given	‘00000000’
Multiple Biometrics Used	‘00000001'
Facial Features	‘00000002'
Voice	‘00000004'
Fingerprint	‘00000008'
Iris	‘00000010'
Retina	‘00000020'
Hand Geometry	‘00000040'
Signature Dynamics	‘00000080'
Keystroke Dynamics	‘00000100'
Lip Movement	‘00000200'
Thermal Face Image	‘00000400'
Thermal Hand Image	‘00000800'
Gait	‘00001000'
Body Odor	‘00002000'
DNA	‘00004000'
Ear Shape	‘00008000'
Finger Geometry	‘00010000'
Palm Print	‘00020000'
Vein Pattern	‘00040000'
Foot Print	‘00080000’

23.1.9 Field 99.102: Biometric Data Quality (BDQ)

This optional ASCII field shall specify a quality score data for the biometric data stored in the BDB in this record. Each subfield shall contain three information items separated by the "US" separator character. They identify a quality score and the algorithm used to create the quality score. This

information is useful to enable the recipient of the quality score to differentiate between quality scores generated by different algorithms and adjust for any differences in processing or analysis as necessary.

1. The first information item shall be a quantitative expression of the predicted matching performance of the biometric sample. This item contains the ASCII representation of the integer image quality score between 0 and 100 assigned to the image data by a quality algorithm. Higher values indicate better quality. An entry of "255" shall indicate a failed attempt to calculate a quality score. An entry of "254" shall indicate that no attempt to calculate a quality score was made. The use of additional values to convey other information should be harmonized with ISO/IEC 19794 standards.

2. The second information item shall specify the ID of the vendor of the quality algorithm used to calculate the quality score. This 4-digit hex value is assigned by IBIA and expressed as four ASCII characters. The IBIA shall maintain the Vendor Registry of CBEFF Biometric Organizations that will map the value in this field to a registered organization.

3. The third information item shall specify a numeric product code assigned by the vendor of the quality algorithm, which may be registered with the IBIA, but registration is not required. It indicates which of the vendor's algorithms was used in the calculation of the quality score. This field contains the ASCII representation of the integer product code and should be within the range 1 to 65535.

This subfield is repeated for each quality algorithm used, separated by the "RS" character.

23.1.10 Field 99.103: BDB Format Owner (BFO)

This mandatory ASCII field shall be used to denote the vendor, standards body, working group, or industry consortium that has defined the format of the biometric data (in the BDB). In a CBEFF structure the BDB Format Owner and Format Type, when used in combination, uniquely identify the specific format of the BDB content. The format and content of the BDB is "owned" by the CBEFF Client (see Clause 6.1 of the CBEFF standard). This BDB format definition may be published (public) or unpublished (non-public).

A CBEFF requirement is that format owners register with IBIA for an assigned identifier of the format owner. The number is guaranteed to be unique. Refer to the CBEFF standard, Clause 6, "CBEFF Patrons and Clients,", for registration information.

The four hex digits assigned by IBIA shall be represented by a string of four ASCII characters.

23.1.11 Field 99.104: BDB Format Type (BFT)

This mandatory ASCII field shall be used to identify the value assigned by the format owner to represent the specific BDB Format as specified by the format owner. This may be a non-standard, unpublished data format or a data format that has been standardized by an industry group, consortium, or standards body. The registration of the Format Type value is recommended but not required. Refer to the CBEFF standard, Clause 6, "CBEFF Patrons and Clients," for registration information.

The four hex digits assigned by the format owner shall be represented by a string of four ASCII characters.

23.1.12 Field 99.105-199: Reserved for Future Definition (RSV)

These fields are reserved for inclusion in future revisions of this standard. None of these fields are to be used at this revision level. If any of these fields are present, they are to be ignored.

23.1.13 Field 99.200-998: User-Defined Fields (UDF)

These fields are user-definable fields. Their size and content shall be defined by the user and be in accordance with the receiving agency. If present, they shall contain ASCII textual information.

23.1.14 Field 99.999: Biometric Data Block (BDB)

This mandatory field shall contain the CBEFF Biometric Data Block (BDB). It shall always be assigned field number 999 and must be the last physical field in the record. For example, 99.999: is followed by a finger pattern BDB in a binary representation.

23.2 End of Type-99 CBEFF Data Record

For the sake of consistency, immediately following the last byte of data from field 99.999 an *"FS"* separator shall be used to separate it from the next logical record. This separator must be included in the length field of the Type-99 record.

23.3 Additional Type-99 CBEFF Data Records

Additional Type-99 records may be included in the file. For each additional CBEFF record, a complete Type-99 logical record together with the *"FS"* separator is required.

24 Another individual

If fingerprint or other biometric data for another individual is to be recorded or transmitted, a new file shall be generated for that individual using the same format as described previously.

Annex A 7-bit American Standard Code for Information Interchange (ASCII)

(normative)

B_7 = MSB →					0	0	0	0	1	1	1	1
b_6 →					0	0	1	1	0	0	1	1
b_5 →					0	1	0	1	0	1	0	1
Bits	b_4 ↓	b_3 ↓	b_2 ↓	b_1 ↓	COLUMN → ROW ↓	0	1	2	3	4	5	6	7
	0	0	0	0	0	NUL	DLE	SP	0	@	P	□	p
	0	0	0	1	1	SOH	DC1	!	1	A	Q	a	q
	0	0	1	0	2	STX	DC2	"	2	B	R	b	r
	0	0	1	1	3	ETX	DC3	#	3	C	S	c	s
	0	1	0	0	4	EOT	DC4	$	4	D	T	d	t
	0	1	0	1	5	ENQ	NAK	%	5	E	U	e	u
	0	1	1	0	6	ACK	SYN	&	6	F	V	f	v
	0	1	1	1	7	BEL	ETB	□	7	G	W	g	w
	1	0	0	0	8	BS	CAN	(	8	H	X	h	x
	1	0	0	1	9	HT	EM	)	9	I	Y	i	y
	1	0	1	0	10	LF	SUB	*	:	J	Z	j	z
	1	0	1	1	11	VT	ESC	+	;	K	[	K	{
	1	1	0	0	12	FF	FS	,	<	L	\	.	|
	1	1	0	1	13	CR	GS	-	=	M	]	m	}
	1	1	1	0	14	SO	RS	.	>	N	^	n	~
	1	1	1	1	15	SI	US	/	?	O	_	o	DEL

Annex B Use of information separator characters
(informative)

FN is the number of a field (including record type) within a tagged-field record.

IF is the information field associated with an FN.

II is the information item belonging to an IF.

SF is the subfield used for multiple entries of an II or an IF.

$\overset{F}{S}$ File separator character – separates logical records.

$\overset{G}{S}$ Group separator character – separates fields.

$\overset{R}{S}$ Record separator character – separates repeated subfields.

$\overset{U}{S}$ Unit separator character – separates information items.

The $\overset{G}{S}$ is used between fields – the $\overset{F}{S}$ between logical records:

$$\mathbf{FN_j : IF} \ \overset{G}{S} \ \mathbf{FN_k : \ldots} \ \overset{F}{S} \ \mathbf{FN_1 : IF} \ \overset{G}{S} \ \mathbf{\ldots} \ \overset{F}{S}$$

For fields with more than one information item, the $\overset{U}{S}$ is used:

$$\mathbf{FN_j : II_a} \ \overset{U}{S} \ \mathbf{II_b} \ \overset{G}{S} \ \mathbf{FN_k \ldots} \ \overset{F}{S}$$

For fields with multiple subfields, the $\overset{R}{S}$ is used:

$$\mathbf{FN_j : II_a} \ \overset{U}{S} \ \mathbf{II_b} \ \overset{R}{S} \ \mathbf{II_a} \ \overset{U}{S} \ \mathbf{II_b} \ \overset{G}{S} \ \mathbf{FN_k \ldots} \ \overset{F}{S}$$

which can be expressed as:

$$\mathbf{FN_j : SF_1} \ \overset{R}{S} \ \mathbf{SF_2} \ \overset{G}{S} \ \mathbf{FN_k \ldots} \ \overset{F}{S}$$

Annex C Base-64 encoding scheme
(normative)

The base-64 Content-Transfer-Encoding is designed to represent arbitrary sequences of octets in a form that need not be humanly readable. The encoding and decoding algorithms are simple, but the encoded data are consistently only about 33 percent larger than the unencoded data. This encoding is virtually identical to the one used in Privacy Enhanced Mail (PEM) applications, as defined in RFC 1421. The base-64 encoding is adapted from RFC 1421, with one change: base-64 eliminates the "*" mechanism for embedded clear text.

A 65-character subset of US-ASCII is used, enabling 6 bits to be represented per printable character. (The extra 65th character, "=", is used to signify a special processing function.)

NOTE: This subset has the important property that it is represented identically in all versions of ISO 646, including US ASCII and all characters in the subset are also represented identically in all versions of EBCDIC. Other popular encodings, such as the encoding used by the uuencode utility and the base-85 encoding specified as part of Level 2 PostScript, do not share these properties, and thus do not fulfill the portability requirements a binary transport encoding for mail must meet.

The encoding process represents 24-bit groups of input bits as output strings of 4 encoded characters. Proceeding from left to right, concatenating 3 8-bit input groups forms a 24-bit input group. These 24 bits are then treated as 4 concatenated 6-bit groups, each of which is translated into a single digit in the base-64 alphabet. When encoding a bit stream via the base-64 encoding, the bit stream must be presumed to be ordered with the most significant bit first. That is, the first bit in the stream will be the high-order bit in the first byte, and the eighth bit will be the low-order bit in the first byte, and so on.

Each 6-bit group is used as an index into an array of 64 printable characters. The character referenced by the index is placed in the output string. These characters, identified in Table C1, below, are selected so as to be universally representable, and the set excludes characters with particular significance to SMTP (e.g., ".", CR, LF) and to the encapsulation boundaries defined in this document (e.g., "-").

The output stream (encoded bytes) must be represented in lines of no more than 76 characters each. All line breaks or other characters not found in Table C1 must be ignored by decoding software. In base-64 data, characters other than those in Table C1, line breaks, and other white space probably indicate a transmission error, about which a warning message or even a message rejection might be appropriate under some circumstances.

Table C1 – Base-64 alphabet

Value Encoding	Value Encoding	Value Encoding	Value Encoding
0 A	17 R	34 I	51 z
1 B	18 S	35 j	52 0
2 C	19 T	36 k	53 1
3 D	20 U	37 l	54 2
4 E	21 V	38 m	55 3
5 F	22 W	39 n	56 4
6 G	23 X	40 o	57 5
7 H	24 Y	41 p	58 6
8 I	25 Z	42 q	59 7
9 J	26 a	43 r	60 8
10 K	27 b	44 s	61 9
11 L	28 c	45 t	62 +
12 M	29 d	46 u	63 /
13 N	30 e	47 v	
14 O	31 f	48 w	(pad) =
15 P	32 g	49 x	
16 Q	33 h	50 y	

Special processing is performed if fewer than 24 bits are available at the end of the data being encoded. A full encoding quantum is always completed at the end of a body. When fewer than 24 input bits are available in an input group, zero bits are added (on the right) to form an integral number of 6-bit groups. Padding at the end of the data is performed using the '=' character. Since all base-64 input is an integral number of octets, only the following cases can arise: (1) the final quantum of encoding input is an integral multiple of 24 bits; here, the final unit of encoded output will be an integral multiple of 4 characters with no "=" padding, (2) the final quantum of encoding input is exactly 8 bits; here, the final unit of encoded output will be two characters followed by two "=" padding characters, or (3) the final quantum of encoding input is exactly 16 bits; here, the final unit of encoded output will be three characters followed by one "=" padding character.

Because it is used only for padding at the end of the data, the occurrence of any '=' characters may be taken as evidence that the end of the data has been reached (without truncation in transit). No such assurance is possible, however, when the number of octets transmitted was a multiple of three.

Any characters outside of the base-64 alphabet are to be ignored in base-64-encoded data. The same applies to any illegal sequence of characters in the base-64 encoding, such as "=====" .Care must be taken to use the proper octets for line breaks if base-64 encoding is applied directly to text material that has not been converted to canonical form. In particular, text line breaks must be converted into CRLF sequences prior to base-64 encoding. The important thing to note is that this may be done directly by the encoder rather than in a prior cannibalization step in some implementations.

NOTE: There is no need to worry about quoting apparent encapsulation boundaries within base-64-encoded parts of multipart because no hyphen characters are used in the base-64 encoding.

Annex D JPEG file interchange format

(normative)

Version 1.02

September 1, 1992

1 408 944-6300

Fax: +1 408 944-6314

E-mail: eric@c3.pla.ca.us

Why a file interchange format

JPEG File Interchange Format (JFIF) is a minimal file format, which enables JPEG bitstreams to be exchanged between a wide variety of platforms and applications. This minimal format does not include any of the advanced features found in the TIFF JPEG specification or any application specific file format. The only purpose of this simplified format is to allow the exchange of JPEG compressed images.

JPEG file interchange format

- Uses JPEG compression
- Uses JPBG interchange format compressed image representation
- PC or Mac or UNIX workstation compatible
- Standard color space: one or three components. For three components YCbCr (CCIR 601-256 levels)
- APP0 marker used to specify Units, X pixel density, Y pixel density, thumbnail
- APP0 marker also used to specify JFIF extensions
- APP0 mater also used to specify application-specific information

JPEG compression

Although any JPEG process is supported by the syntax of the JFIF it is strongly recommended that the JPEG baseline process be used for the purposes of file interchange. This ensures maximum compatibility with all applications supporting JPEG. JFIF conforms to the JPEG Draft International Standard (ISO DIS 10918-1).

The JFIF is entirely compatible with the standard JPEG interchange format; the only additional requirement is the mandatory presence of the APP0 marker right after the SOI marker. Note that the JPEG interchange format requires (as does JFIF) all table specifications used in the encoding process be coded in the bitstream prior to their use.

Compatible across platforms

The JFIF is compatible across platforms: for example, it can use any resource forks supported by the Macintosh and by PCs or workstations, but not just one platform.

Standard color space

The color space to be used is YCbCr as defined by CCIR 601(256 levels). The RGB components calculated by linear conversion from YCbCr shall <u>not</u> be gamma corrected (gamma = 1.0). If only one component is used, that component shall be Y.

APP0 marker is used to identify JPEG FIF

- The APP0 marker is used to identify a JPEG FIF file.
- The JPEG FIF APP0 marker is mandatory right after the SOI marker.
- The JFIF APP0 marker is identified by a zero terminated string: *"JFIF".*
- The APP0 can be used for any other purpose by the application provided it can be distinguished from the JFIF APP0.
- The JFIF APP0 marker provides information which is missing from the JPEG stream: version number, X and Y pixel density (dots per inch or dots per cm), pixel aspect ratio (derived from X and Y pixel density), thumbnail.

APP0 marker used to specify JFIF extensions

Additional APP0 marker segment(s) can optionally be used to specify JFIF extensions. If used, these segments must immediately follow the JFIF APP0 marker. Decoders should skip any unsupported JFIF extension segments and continue decoding.

The JFIF extension APP0 marker is identified by a zero terminated string: *"JFXX"*. The JFIF extension APP0 marker segment contains a 1-byte code, which identifies the extension. This version, version 1.02, has only one extension defined: an extension for defining thumbnails stored in formats other than 24-bit RGB.

APP0 marker used for application-specific information

Additional APP0 marker segments can be used to hold application-specific information which does not affect the decodability or displayability of the JFIF file. Application-specific APP0 marker segments must appear after the JFIF APP0 and any JFXX APP0 segments. Decoders should skip any unrecognized application-specific APP0 segments.

Application-specific APP0 marker segments are identified by a zero terminated string which identifies the application (not "*JFIF"* or *"JFXX"*). This string should be an organization name or company trademark. Generic strings such as dog, cat, tree, etc. should not be used.

Conversion to and from RGB

Y, Cb, and Cr are converted from R, G, and B as defined in CCIR Recommendation 601 but are normalized so as to occupy the full 256 levels of an 8-bit binary encoding. More precisely:

$Y = 256 * E'_y$
$Cb = 256 * [E'_{Cb}] + 128$
$Cr= 256 * [E'_{Cr}] + 128$

where the E'_y E'_{Cb} and E'_{Cr} are defined as in CCIR 601. Since values of E'_y have a range of 0 to 1.0 and those for E'_{Cb} and E'_{Cr} have a range of -0.5 to +0.5, Y, Cb, and Cr must be clamped to 255 when they are maximum value.

RGB to YCbCr conversion

YCbCr (256 levels) can be computed directly from 8-bit RGB as follows:

$Y = 0.299 R + 0.587G + 0.114B$
$Cb = -0.1687 R - 0.3313 G + 0.5 B + 128$
$Cr = 0.5R - 0.4177 G - 0.0813 B + 128$

NOTE - Not all image file formats store image samples in the order R_0, G_0, B_0, ... R_n, G_n, B_n. Be sure to verify the sample order before converting an RGB file to JFIF

YCbCr to RGB conversion

RGB can be computed directly from YCbCr (256 levels) as follows:

$R = Y + 1.402 (Cr - 128)$
$G = Y-0.34414 (Cb - 128) - 0.71414 (Cr - 128)$
$B = Y + 1.772 (Cb - 128)$

Image orientation

In JFIF files, the image orientation is always top-down. This means that the first image samples encoded in a JFIF file are located in the upper left hand corner of the image and encoding proceeds from left to right and top to bottom. Top-down orientation is used for both the full resolution image and the thumbnail image.

The process of converting an image file having bottom-up orientation to JFIF must include inverting the order of all image lines before JPEG encoding.

Spatial relationship of components

Specification of the spatial positioning of pixel samples within components relative to the samples of other components is necessary for proper image post processing and accurate image presentation. In JFIF files, the position of the pixels in subsampled components are defined with respect to the highest resolution component. Since components must be sampled orthogonally (along rows and columns), the spatial position of the samples in a given subsampled component may be determined by specifying the horizontal and vertical offsets of the first sample, i.e. the sample in the upper left corner, with respect to the highest resolution component.

The horizontal and vertical offsets of the first sample in a subsampled component, $Xoffset_i$ [0,0] and $Yoffset_i$ [0,0], are defined to be:

$$Xoffset_i[0,0] = ((Nsamples_{ref} / Nsamples_j) / 2) - 0.5$$
$$Yoffset_i[0,0] = ((Nlines_{ref} / Nlines_i) / 2) - 0.5$$

where

$Nsamples_{ref}$ is the number of samples per line in the largest component;
$Nsamples_i$ is the number of samples per line in the ith component;
$Nlines_{ref}$ is the number of lines in the largest component;
$Nlines_i$ is the number of lines in the ith component.

Proper subsampling of components incorporates an anti-aliasing filter which reduces the spectral bandwidth of the full resolution components. Subsampling can easily be accomplished using a symmetrical digital filter with an even number of taps (coefficients). A commonly used filter for 2:1 subsampling utilizes two taps (1/2,1/2).

As an example, consider a 3 component image which is comprised of components having the following dimensions:

Component 1:	256 samples, 288 lines
Component 2:	128 samples, 144 lines
Component 3:	64 samples, 96 lines

In a JFIF file, centers of the samples are positioned as illustrated below:

```
x       x       x       x
    □               □
x       x   ⊗   x       x
x       x       x       x
    □               □
x       x       x       x
```

where

X Component 1

- Component 2
- Component 3

NOTE - This definition is compatible with industry standards such as Postscript Level 2 and QuickTime. This definition is not compatible with the conventions used by CCIR Recommendation 601-I and other digital video formats. For these formats, pre-processing of the chrominance components is necessary prior to compression in order to ensure accurate reconstruction of the compressed image.

JPEG file interchange format specification

The syntax of a JFIF file conforms to the syntax for interchange format defined in Annex B of ISO DIS 10918-1. In addition, a JFIF file uses APP0 marker segments and constrains certain parameters in the frame header as defined below.

X'FF', SOI

X'FF', APP0, length, identifier, version, units, Xdensity, Ydensity, Xthumbnail, Ythumbnail, $(RGB)_n$

Length	(2 bytes)	Total APP0 field byte count, including the byte count value (2 bytes), but excluding the APP0 marker itself
identifier	(5 bytes)	= X'4A', X'46', X'49', X'46', X'00' This zero terminated string ("JFIF") Uniquely identifies this APP0 marker. This string shall have zero parity (bit 7=0).
version	(2 bytes)	= X'0102' The most significant byte is used for major revisions, the least significant byte for minor revisions. Version 1.02 is the current released revision.
units	(1 byte)	Units for the X and Y densities units = 0: no units, X and Y specify the pixel units = 1: X and Y are dots per inch units = 2: X and Y are dots per cm
Xdensity	(2 bytes)	Horizontal pixel density
Ydensity	(2 bytes)	Vertical pixel density
Xthumbnail	(1 byte)	Thumbnail horizontal pixel count
Ythumbnail	(1 byte)	Thumbnail vertical pixel count
$(RGB)_n$	(3n bytes)	Packed (24-bit) RGB values for the thumbnail pixels, n = Xthumbnail * Ythumbnail

[Optional JFIF extension APP0 marker segment(s) - see below]

•
•
•

X 'FF', SOFn, length,. frame parameters

Number of components	Nf	= 1 or 3
1st component	C1	= 1 = Y component

2nd component	C2	= 2 = Cb component
3rd component	C3	= 3 = Cr component

•
•
•

X 'FF', EOI

JFIF Extension: APP0 marker segment

Immediately following the JFIF APP0 marker segment may be a JFIF extension APP0 marker. This JFIF extension APP0 marker segment may only be present for JFIF versions 1.02 and above. The syntax of the JFIF extension APP0 marker segment is:

<u>X 'FF', APP0,. Length, identifier, extension code, extension data</u>

length (2 bytes) Total APP0 field byte count, including the byte count value (2 bytes), but excluding the APP0 marker itself

identifier (5 bytes) = *X '4A', X '46*[1]*, X '58', X '58', X '00'* This zero terminated string ("JFXX") uniquely identifies this APP0 marker. This string shall have zero parity (bit 7 = *0*).

extension_code (1 byte) = Code which identifies the extension. In this version, the following extensions are defined:

= *X '10'* Thumbnail coded using JPEG
= *X '11'* Thumbnail stored using 1 byte/pixel
= *X '13'* Thumbnail stored using 3 bytes/pixel

extension_data (variable) = The specification of the remainder of the JFIF extension APP0 marker segment varies with the extension. See below for a specification of extension_data for each extension.

JFIF Extension: Thumbnail coded using JPEG

This extension supports thumbnails compressed using JPEG. The compressed thumbnail immediately follows the extension-code (*X 'I0'*) in the extension_data field and the length of the compressed data must be included in the JFIF extension APP0 marker length field.

The syntax of the extension_data field conforms to the syntax for interchange format defined in Annex B of ISO DIS 10917-1. However, no "JFIF" or "JFXX" marker segments shall be present. As in the full resolution image of the JFIF file, the syntax of extension_data constrains parameters in the frame header as defined below:

X 'FF', SOI

•
•

<u>X'FF'. SOF_n, length, frame parameters</u>

Number of components Nf = 1 or 3
1st component C_1 = 1 = Y component

2nd component	C_2 = 2 = Cb component
3rd component	C_3 = 3 = Cr component

•
•

X 'FF', EOI

JFIF Extension: Thumbnail stored using one byte per pixel

This extension supports thumbnails stored using one byte per pixel and a color palette in the extension_data field. The syntax of extension_data is:

Xthumbnail	(I byte)	Thumbnail horizontal pixel count
Ythumbnail	(1 byte)	Thumbnail vertical pixel count
Palette color	(768 bytes)	24-bit RGB pixel values for the palette. The RGB values define the colors represented by each value of an 8-bit binary encoding (0 - 255).
$(pixel)_n$ pixels	(n bytes)	8-bit values for the thumbnail n = Xthumbnail * Ythumbnall

JFIF Extension: Thumbnail stored using three bytes per pixel

This extension supports thumbnails stored using three bytes per pixel in the extension_data field. The syntax of extension_data is:

Xthumbnail	(1 byte)	Thumbnail horizontal pixel count
Ythumbnail	(1 byte)	Thumbnail vertical pixel count
$(RGB)_n$ the thumbnail	(3n bytes)	Packed (24-bit) RGB values for pixels, n = Xthumbnail * Ythumbnail

Useful tips

- You can identify a JFIF file by looking for the following sequence: *X'FF', SOI, X'FF', APP0*, <2 bytes to be skipped>, *"JFIF", X'00'.*
- If you use APP0 elsewhere, be sure <u>not</u> to have the strings "*JFIF*" or *"JFXX"* right after the APP0 marker.
- If you do not want to include a thumbnail, just program Xthumbnail = Ythumbnail = 0.
- Be sure to check the version number in the special APP0 field. In general, if the major version number of the JFIF file matches that supported by the decoder, the file will be decodable.
- If you only want to specify a pixel aspect ratio, put 0 for the units field in the special APP0 field. Xdensity and Ydensity can then be programmed for the desired aspect ratio. Xdensity = 1, Ydensity = 1 will program a 1:1 aspect ratio. Xdensity and Ydensity should always be non-zero.

Annex E NCIC Codes for Scars, marks, tattoos, and other characteristics

(normative)

This annex contains codes based on portions of the Ninth edition (December, 2000) of the NCIC Code Manual for describing Scars, Marks, Tattoos, and other characteristics (alphabetized by code). The following list is intended to standardize entry of data in the SMT Field. Care must be taken to enter spaces exactly as shown. However, as the NCIC Code Manual gets updated, the latest edition shall be the governing document regarding valid SMT codes.

Item/Location	Code
Arm, nonspecific, artificial	ART ARM
Breast, nonspecific, artificial	ART BRST
Breast implant, left and right	ART BRSTS
Ear, nonspecific, artificial	ART EAR
Artificial elbow joint	ART ELB0W
Eye, nonspecific, artificial	ART EYE
Foot, nonspecific, artificial	ART F00T
Hand, nonspecific, artificial	ART HAND
Artificial hip joint	ART HIP
Artificial knee joint	ART KNEE
Arm, left, artificial	ART L ARM
Breast implant, left	ART L BRST
Ear, left, artificial	ART L EAR
Left Elbow, artificial	ART L ELB
Eye, left, artificial	ART L EYE
Foot, left, artificial	ART L FT
Left Hip, artificial	ART L HIP
Hand, left, artificial	ART L HND
Left Knee, artificial	ART L KNE
Leg, left, artificial	ART L LEG
Left Shoulder, artificial	ART L SHLD
Artificial larynx	ART LARYNX
Leg, nonspecific, artificial	ART LEG
Arm, right, artificial	ART R ARM
Breast implant, right	ART R BRST
Ear, right, artificial	ART R EAR
Right Elbow, artificial	ART R ELB
Eye, right, artificial	ART R EYE
Foot, right, artificial	ART R FT
Right Hip, artificial	ART R HIP
Hand, right, artificial	ART R HND
Right Knee, artificial	ART R KNE
Leg, right, artificial	ART R LEG
Right Shoulder, artificial	ART R SHLD
Artificial shoulder joint	ART SHLD
Bald/Balding	BALD
Blind, both eyes	BLIND
Blind, one eye, nonspecific	BLND EYE
Blind, left eye	BLND L EYE
Blind, right eye	BLND R EYE
Brace, left and right arms	BRA LR ARM
Brace, left and right legs	BRA LR LEG
Brace, one arm, nonspecific	BRAC ARM
Brace, left arm	BRAC L ARM
Brace, left leg	BRAC L LEG
Brace, one leg, nonspecific	BRAC LEG
Brace, right arm	BRAC R ARM
Brace, right leg	BRAC R LEG
Brace, teeth	BRAC TEETH
Brace, back	BRACE BACK
Brace, neck	BRACE NECK
Cane	CANE
Cardiac pacemaker	CARD PACEM
Cataract, left eye	CATA L EYE
Cataract, right eye	CATA R EYE
Cataract, (nonspecified)	CATARACT
Cauliflower Ear	CAUL EAR
Cauliflower ear, left	CAUL L EAR
Cauliflower ear, right	CAUL R EAR
Cleft Lip	CL LIP
Cleft chin	CLEFT CHIN
Cleft palate	CLEFT PAL
Arm, nonspecific, crippled	CRIP ARM
Finger(s), nonspecific, crippled	CRIP FGR
Foot, nonspecific, crippled	CRIP F00T
Hand, nonspecific, crippled	CRIP HAND
Crippled arm, left	CRIP L ARM

Crippled finger(s), left hand (includes webbed fingers)	CRIP L FGR
Crippled foot, left (includes clubfoot)	CRIP L FT
Crippled hand, left	CRIP L HND
Crippled leg, left	CRIP L LEG
Crippled toe(s), left (includes webbed toes)	CRIP L T0E
Leg, nonspecific, crippled	CRIP LEG
Crippled arm, right	CRIP R ARM
Crippled finger(s), right hand (includes webbed fingers)	CRIP R FGR
Crippled foot, right (includes clubfoot)	CRIP R FT
Crippled hand, right	CRIP R HND
Crippled leg, right	CRIP R LEG
Crippled toe(s), right (includes webbed toes)	CRIP R T0E
Toe(s), nonspecific, crippled	CRIP T0E
Crutches	CRUTCHES
Crosseyed	CR0SSEYED
Colostomy appliances	C0L0ST APP
Contact lenses	C0N LENSES
Alcohol	DA ALC0H0L
Amphetamines (includes stimulants, speed, etc.)	DA AMPHETA
Barbiturates	DA BARBITU
Cocaine (includes crack)	DA C0CAINE
Glue	DA GLUE
Hallucinogens	DA HALLUCI
Marijuana	DA MARIJUA
Narcotics (includes Heroin,Morphine, Dilaudid, Methadone, etc.)	DA NARC0TI
Paint (includes thinner)	DA PAINT
Ritalin	DA RITALIN
Rohypnol (Brand name for Flunitrazepam. Also referred to as "rophies", "roofies", "ruffies", and "roche".	DA R0HYPNL
Other drugs of abuse not listed above, identify in the miscellaneous (MIS) field	DA 0THER

Deaf, left and right ears	DEAF
Deaf, one ear (nonspecific)	DEAF EAR
Deaf, left ear	DEAF L EAR
Deaf-mute	DEAF MUTE
Deaf, right ear	DEAF R EAR
Denture, lower only	DENT L0W
Denture, upper only	DENT UP
Denture, upper and lower	DENT UP L0
Deviated septum	DEV SEPTUM
Cheek, nonspecific, dimple	DIMP CHEEK
Dimples, chin	DIMP CHIN
Face, dimple	DIMP FACE
Dimples, left cheek (face)	DIMP L CHK
Dimples, right cheek (face)	DIMP R CHK
Abdomen	DISC ABD0M
Ankle, nonspecific	DISC ANKL
Arm, nonspecific	DISC ARM
Back	DISC BACK
Breast, nonspecific	DISC BRST
Buttocks, nonspecific	DISC BUTTK
Calf, nonspecific, discolored	DISC CALF
Cheek (face), nonspecific	DISC CHEEK
Chest	DISC CHEST
Chin	DISC CHIN
Ear, nonspecific	DISC EAR
Elbow, nonspecific, discolored	DISC ELB0W
Eyebrow, nonspecific	DISC EYE
Forearm, nonspecific, discolored	DISC F ARM
Face, nonspecific	DISC FACE
Finger, nonspecific	DISC FGR
Forehead	DISC FHD
Foot, nonspecific	DISC F00T
Groin, nonspecific, discolored	DISC GR0IN
Hand, nonspecific, discolored	DISC HAND
Head	DISC HEAD
Hip, nonspecific	DISC HIP
Knee, nonspecific	DISC KNEE
Ankle, left	DISC L ANK
Arm, left	DISC L ARM
Breast, left	DISC L BRS
Buttock, left	DISC L BUT
Left Calf, discolored	DISC L CALF

Cheek (face), left	DISC L CHK
Ear, left	DISC L EAR
Left Elbow, discolored	DISC L ELB
Eyebrow, left/left eye area	DISC L EYE
Finger(s), left hand	DISC L FGR
Foot, left	DISC L FT
Hip, left	DISC L HIP
Hand, left	DISC L HND
Leg, left	DISC L LEG
Lip, lower	DISC L LIP
Left Toe, discolored	DISC L T0E
Wrist, left	DISC L WRS
Leg, nonspecific	DISC LEG
Left Forearm, discolored	DISC LF ARM
Lip, nonspecific	DISC LIP
Knee, left	DISC LKNEE
Shoulder, left	DISC LSHLD
Thigh, left	DISC LTHGH
Neck	DISC NECK
Nose	DISC N0SE
Penis	DISC PENIS
Ankle, right	DISC R ANK
Arm, right	DISC R ARM
Breast, right	DISC R BRS
Buttock, right	DISC R BUT
Right Calf, discolored	DISC R CALF
Cheek (face), right	DISC R CHK
Ear, right	DISC R EAR
Right Elbow, discolored	DISC R ELB
Eyebrow, right/right eye area	DISC R EYE
Finger(s), right hand	DISC R FGR
Foot, right	DISC R FT
Hip, right	DISC R HIP
Hand, right	DISC R HND
Leg, right	DISC R LEG
Right Toe, discolored	DISC R T0E
Wrist, right	DISC R WRS
Right Forearm, discolored	DISC RF ARM
Knee, right	DISC RKNEE
Shoulder, right	DISC RSHLD
Thigh, right	DISC RTHGH
Shoulder, nonspecific	DISC SHLD
Thigh, nonspecific	DISC THGH
Toe(s), nonspecific, discolored	DISC T0E
Lip, upper	DISC U LIP
Upper Left Arm, discolored	DISC UL ARM

Upper Right Arm, discolored	DISC UR ARM
Wrist, nonspecific	DISC WRIST
Tubes in ears, left and right	EAR TUBES
Extra breast, nonspecific	EXTR BRST
Extra nipple, center	EXTR C NIP
Extra vertebrae, cervical	EXTR C VRT
Extra breast, center	EXTR CBRST
Finger(s), nonspecific, extra	EXTR FGR
Extra finger(s), left hand	EXTR L FGR
Extra nipple, left	EXTR L NIP
EXTRA TOOTH/TEETH (LOWER JAW)	EXTR L TTH
Extra toe(s), left	EXTR L T0E
Extra vertebrae, lumbar	EXTR L VRT
Extra breast, left	EXTR LBRST
Extra nipple, nonspecific	EXTR NIP
Extra finger(s), right hand	EXTR R FGR
Extra nipple, right	EXTR R NIP
Extra toe(s), right	EXTR R T0E
Extra breast, right	EXTR RBRST
Tooth/Teeth, nonspecific, extra	EXTR TTH
Toe(s), nonspecific, extra	EXTR T0E
EXTRA TOOTH/TEETH (UPPER JAW)	EXTR U TTH
Extra vertebrae, nonspecific	EXTR VRT
Ankle, nonspecific	FRC ANKL
Arm, nonspecific	FRC ARM
Back	FRC BACK
Clavicle, nonspecific	FRC CLAVIC
Elbow, nonspecific, fractured	FRC ELB0W
Finger(s), nonspecific	FRC FGR
Foot, nonspecific	FRC F00T
Hand, nonspecific	FRC HAND
Hip, nonspecific, fractured	FRC HIP
Jaw, nonspecific	FRC JAW
Knee, nonspecific	FRC KNEE
Ankle, left	FRC L ANKL
Left Arm, fractured	FRC L ARM
Left Elbow, fractured	FRC L ELB
Finger(s), left	FRC L FGR
Foot, left	FRC L F00T
Hand, left	FRC L HAND
Left Hip, fractured	FRC L HIP
Knee, left	FRC L KNEE

Left Leg, fractured	FRC L LEG
Rib(s), left	FRC L RIB
Shoulder, left	FRC L SHLD
Toe(s), left foot	FRC L T0E
Wrist, left	FRC L WRST
Clavicle, left	FRC LCLAVI
Leg, nonspecific	FRC LEG
Arm, lower left	FRC LL ARM
Jaw, lower left	FRC LL JAW
Leg, lower left	FRC LL LEG
Pelvis bone, left	FRC LPELVI
Arm, lower right	FRC LR ARM
Jaw, lower left	FRC LR JAW
Leg, lower right	FRC LR LEG
Neck	FRC NECK
Nose	FRC N0SE
Pelvis	FRC PELVIS
Ankle, right	FRC R ANKL
Right Arm, fractured	FRC R ARM
Right Elbow, fractured	FRC R ELB
Finger(s), right	FRC R FGR
Foot, right	FRC R F00T
Hand, right	FRC R HAND
Right Hip, fractured	FRC R HIP
Knee, right	FRC R KNEE
Right Leg, fractured	FRC R LEG
Rib(s), right	FRC R RIB
Shoulder, right	FRC R SHLD
Toe(s), right foot	FRC R T0E
Wrist, right	FRC R WRST
Clavicle, right	FRC RCLAVI
Rib(s), nonspecific	FRC RIBS
Pelvis bone, right	FRC RPELVI
Shoulder, nonspecific	FRC SHLD
Skull	FRC SKULL
Spine	FRC SPINE
Sternum	FRC STERN
Toe(s), nonspecific	FRC T0E
Arm, upper left	FRC UL ARM
Jaw, upper left	FRC UL JAW
Leg, upper left	FRC UL LEG
Arm, upper right	FRC UR ARM
Jaw, upper right	FRC UR JAW
Leg, upper right	FRC UR LEG
Wrist, nonspecific	FRC WRIST
Freckles	FRECKLES
Glasses (prescription)	GLASSES
Glaucoma	GLAUC0MA
Gold tooth	G0LD T00TH

Hair implants	HAIR IMPL
Hearing Aid	HEAR AID
Ankle, nonspecific	HFR ANKL
Arm, nonspecific	HFR ARM
Back	HFR BACK
Clavicle, nonspecific	HFR CLAVIC
Elbow, nonspecific, healed fractured	HFR ELB0W
Finger(s), nonspecific	HFR FGR
Foot, nonspecific	HFR F00T
Hand, nonspecific	HFR HAND
Hip, nonspecific, healed fractured	HFR HIP
Jaw, nonspecific	HFR JAW
Knee, nonspecific	HFR KNEE
Ankle, left	HFR L ANKL
Left Arm, healed fractured	HFR L ARM
Left Elbow, healed fractured	HFR L ELB
Finger(s), left	HFR L FGR
Foot, left	HFR L F00T
Hand, left	HFR L HAND
Left Hip, healed fractured	HFR L HIP
Knee, left	HFR L KNEE
Left Leg, healed fractured	HFR L LEG
Rib(s), left	HFR L RIB
Shoulder, left	HFR L SHLD
Toe(s), left foot	HFR L T0E
Wrist, left	HFR L WRST
Clavicle, left	HFR LCLAVI
Leg, nonspecific	HFR LEG
Arm, lower left	HFR LL ARM
Jaw, lower left	HFR LL JAW
Leg, lower left	HFR LL LEG
Pelvis bone, left	HFR LPELVI
Arm, lower right	HFR LR ARM
Jaw, lower left	HFR LR JAW
Leg, lower right	HFR LR LEG
Neck	HFR NECK
Nose	HFR N0SE
Pelvis	HFR PELVIS
Ankle, right	HFR R ANKL
Right Arm, healed fractured	HFR R ARM
Right Elbow, healed fractured	HFR R ELB
Finger(s), right	HFR R FGR
Foot, right	HFR R F00T
Hand, right	HFR R HAND

Right Hip, healed fractured	HFR R HIP
Knee, right	HFR R KNEE
Right Leg, healed fractured	HFR R LEG
Rib(s), right	HFR R RIB
Shoulder, right	HFR R SHLD
Toe(s), right foot	HFR R T0E
Wrist, right	HFR R WRST
Clavicle, right	HFR RCLAVI
Rib(s), nonspecific	HFR RIBS
Pelvis bone, right	HFR RPELVI
Shoulder, nonspecific	HFR SHLD
Skull	HFR SKULL
Spine	HFR SPINE
Sternum	HFR STERN
Toe(s), nonspecific	HFR T0E
Arm, upper left	HFR UL ARM
Jaw, upper left	HFR UL JAW
Leg, upper left	HFR UL LEG
Arm, upper right	HFR UR ARM
Jaw, upper right	HFR UR JAW
Leg, upper right	HFR UR LEG
Wrist, nonspecific	HFR WRIST
Humpbacked	HUMPBACKED
Penile implant	IMPL PENIS
Intramedullary rod	INTRA R0D
Intrauterine device	IUD
Acne	MC ACNE
Attention Deficit Disorder	MC ADD
Alcoholism	MC ALC0H0L
Allergies including asthma	MC ALLERGY
Alzheimer's Disease	MC ALZHMRS
Arthritis	MC ARTHRTS
Behavior Disorder (includes Autism, Depression, Schizophrenia, Suicidal Tendencies (past and present)	MC BEHAVI0
Hematological Diseases (disease of the blood - includes: anemia, hemophilia, leukemia, and sickle cell anemia	MC BL00D
Cancer	MC CANCER
Diabetic	MC DIABTIC
Drug Abuse	MC DRUGAB
Down's Syndrome	MC D0WNSYN

Eating Disorders (Includes Anorexia Nervosa and Bulimia)	MC EATDIS
Heart or circulatory diseases including: high blood pressure, heart failure, heart attack, hardening of the arteries, and circulation problems	MC HEART
Kidney Conditions or Diseases	MC KIDNEY
Liver Disease (Including cirrhosis and hepatitis)	MC LIVER
Nervous conditions including: seizures, stroke, senility, and mental retardation	MC NERV0US
Neurological Conditions or Diseases (includes Cerebral Palsy, Epilepsy, Multiple Sclerosis, Parkinson's Disease)	MC NRLGCAL
Paraplegic	MC PARPLGC
Pregnancy - Past	MC PASTPRE
Pulmonary (Lung) Diseases (includes Emphesyma, Cystic Fibrosis)	MC PLMNARY
Pregnancy - Present	MC PREGNAN
Quadriplegic	MC QUADPLG
Skin Disorders (includes psoriasis and eczema)	MC SKIN
Tuberculosis	MC TB
Thyroid Conditions or Diseases	MC THYR0ID
Tourette's Syndrome	MC T0URETE
Other medical disorders/conditions not listed above, identify in the Miscellaneous (MIS) Field	MC 0THER
Adenoids	MISS ADND
Appendix	MISS APPNX
Arm, nonspecific, missing	MISS ARM
Breast, nonspecific, missing	MISS BRST
Breasts	MISS BRSTS

Missing Cervical Vertebra(e)	MISS C VRT
Ear, nonspecific, missing	MISS EAR
Eye, nonspecific, missing	MISS EYE
Finger(s), nonspecific, missing	MISS FGR
Finger Joint, nonspecific, missing	MISS FJT
Foot, nonspecific, missing	MISS F00T
Gallbladder	MISS GALL
Hand, nonspecific, missing	MISS HAND
Intestines	MISS INTES
Kidney, nonspecific, missing	MISS KID
Arm, left	MISS L ARM
Ear, left	MISS L EAR
Eye, left	MISS L EYE
Finger(s), left hand	MISS L FGR
Finger joint(s), left hand	MISS L FJT
Foot, left	MISS L FT
Hand, left	MISS L HND
Kidney, left	MISS L KID
Leg, left	MISS L LEG
Testis, left	MISS L TES
Toes(s), left foot	MISS L T0E
Missing Lumbar Vertebra(e)	MISS L VRT
Breast, left	MISS LBRST
Leg, nonspecific, missing	MISS LEG
Arm, lower left	MISS LLARM
Leg, lower left	MISS LLLEG
Lung, left	MISS LLUNG
Arm, lower right	MISS LRARM
Leg, lower right	MISS LRLEG
Larynx	MISS LRYNX
Lung, nonspecific, missing	MISS LUNG
Ovary, left	MISS L0VAR
Nose	MISS N0SE
Pancreas	MISS PANCR
Missing Penis	MISS PENIS
Prostate Gland	MISS PR0ST
Arm, right	MISS R ARM
Ear, right	MISS R EAR
Eye, right	MISS R EYE
Finger(s), right hand	MISS R FGR
Finger joint(s), right hand	MISS R FJT
Foot, right	MISS R FT
Hand, right	MISS R HND

Kidney, right	MISS R KID
Leg, right	MISS R LEG
Testis, right	MISS R TES
Toes(s), right foot	MISS R T0E
Breast, right	MISS RBRST
Lung, right	MISS RLUNG
Ovary, right	MISS R0VAR
Spleen	MISS SPLEN
Stomach	MISS ST0MA
Testical, nonspecific, missing	MISS TES
Thyroid	MISS THYRD
Toe(s), nonspecific, missing	MISS T0E
Tongue	MISS T0NG
Tonsils	MISS T0NSL
Uterus	MISS UTRUS
Missing Vertebra(e),nonspecific	MISS VRT
Ovaries	MISS 0VARS
Ovary, nonspecific, missing	MISS 0VARY
Mute (To be used if person is mute but not deaf.)	MUTE
Abdomen	M0LE ABD0M
Ankle, nonspecific	M0LE ANKL
Arm, nonspecific, mole	M0LE ARM
Back	M0LE BACK
Breast, nonspecific	M0LE BRST
Buttocks, nonspecific	M0LE BUTTK
Calf, nonspecific, mole	M0LE CALF
Chest	M0LE CHEST
Chin	M0LE CHIN
Cheek (face), nonspecific	M0LE CHK
Ear, nonspecific	M0LE EAR
Elbow, nonspecific, mole	M0LE ELB0W
Eye, nonspecific, mole	M0LE EYE
Forearm, nonspecific, mole	M0LE F ARM
Face, mole	M0LE FACE
Finger, nonspecific	M0LE FGR
Forehead	M0LE FHD
Foot, nonspecific	M0LE F00T
Groin area	M0LE GR0IN
Hand	M0LE HAND
Head, nonspecific	M0LE HEAD
Hip, nonspecific	M0LE HIP
Knee, nonspecific	M0LE KNEE

Ankle, left	M0LE L ANK
Arm, left	M0LE L ARM
Buttock, left	M0LE L BUT
Left Calf, mole	M0LE L CALF
Cheek (face), left	M0LE L CHK
Ear, left	M0LE L EAR
Left Elbow, mole	M0LE L ELB
Eyebrow, left/left eye area	M0LE L EYE
Finger(s), left hand	M0LE L FGR
Foot, left	M0LE L FT
Hip, left	M0LE L HIP
Hand, left	M0LE L HND
Knee, left	M0LE L KNE
Leg, left	M0LE L LEG
Lip, lower	M0LE L LIP
Shoulder, left	M0LE L SHD
Thigh, left	M0LE L THG
Left Toe, mole	M0LE L T0E
Wrist, left	M0LE L WRS
Breast, left	M0LE LBRST
Leg, nonspecific	M0LE LEG
Left forearm, mole	M0LE LF ARM
Lip, nonspecific	M0LE LIP
Neck	M0LE NECK
Nose	M0LE N0SE
Penis	M0LE PENIS
Ankle, right	M0LE R ANK
Arm, right	M0LE R ARM
Buttock, right	M0LE R BUT
Right Calf, mole	M0LE R CALF
Cheek (face), right	M0LE R CHK
Ear, right	M0LE R EAR
Right Elbow, mole	M0LE R ELB
Eyebrow, right/right eye area	M0LE R EYE
Finger(s), right hand	M0LE R FGR
Foot, right	M0LE R FT
Hip, right	M0LE R HIP
Hand, right	M0LE R HND
Knee, right	M0LE R KNE
Leg, right	M0LE R LEG
Shoulder, right	M0LE R SHD
Thigh, right	M0LE R THG
Right Toe, mole	M0LE R T0E
Wrist, right	M0LE R WRS
Breast, right	M0LE RBRST
Right forearm, mole	M0LE RF ARM
Shoulder, nonspecific	M0LE SHLD
Thigh, nonspecific	M0LE THGH

Toe(s), nonspecific, mole	M0LE T0E
Lip, right	M0LE U LIP
Upper Left Arm, mole	M0LE UL ARM
Upper Right Arm, mole	M0LE UR ARM
Wrist, nonspecific, mole	M0LE WRS
Ankle, nonspecific, needle mark	NM ANKL
Arm, nonspecific, needle mark	NM ARM
Buttock, nonspecific, needle mark	NM BUTTK
Calf, nonspecific, needle mark	NM CALF
Elbow, nonspecific, needle mark	NM ELB0W
Finger(s), nonspecific, needle mark	NM FGR
Foot, nonspecific, needle mark	NM F00T
Groin, nonspecific, needle mark	NM GR0IN
Hand, nonspecific, needle mark	NM HAND
Hip, nonspecific, needle mark	NM HIP
Knee, nonspecific, needle mark	NM KNEE
Left Ankle, needle mark	NM L ANKL
Arm, left	NM L ARM
Buttock, left	NM L BUTTK
Left Calf, needle mark	NM L CALF
Left Elbow, needle mark	NM L ELB
Finger(s), left hand	NM L FGR
Foot, left	NM L F00T
Left Hip, needle mark	NM L HIP
Hand, left	NM L HND
Left Knee, needle mark	NM L KNE
Leg, left	NM L LEG
Left Shoulder, needle mark	NM L SHLD
Thigh, left	NM L THIGH
Left Toe, needle mark	NM L T0E
Wrist, left	NM L WRIST
Leg, nonspecific, needle mark	NM LEG
Lower Left Arm, needle mark	NM LL ARM
Lower Right Arm, needle mark	NM LR ARM
Penis, needle mark	NM PENIS
Right Ankle, needle mark	NM R ANKL
Arm, right	NM R ARM

Buttock, right	NM R BUTTK
Right Calf, needle mark	NM R CALF
Right Elbow, needle mark	NM R ELB
Finger(s), right hand	NM R FGR
Foot, right	NM R F00T
Right Hip, needle mark	NM R HIP
Hand, right	NM R HND
Right Knee, needle mark	NM R KNE
Leg, right	NM R LEG
Right Shoulder, needle mark	NM R SHLD
Thigh, right	NM R THIGH
Right Toe, needle mark	NM R T0E
Wrist, right	NM R WRIST
Shoulder, nonspecific, needle mark	NM SHLD
Thigh, nonspecific, needle mark	NM THIGH
Toe(s), nonspecific, needle mark	NM T0E
Upper Left Arm, needle mark	NM UL ARM
Upper Right Arm, needle mark	NM UR ARM
Wrist, nonspecific, needle mark	NM WRIST
Pierced abdomen	PRCD ABDMN
Pierced back	PRCD BACK
Pierced ear, one nonspecific	PRCD EAR
Pierced ears	PRCD EARS
Pierced eyebrow, nonspecific	PRCD EYE
Pierced genitalia	PRCD GNTLS
Pierced left ear	PRCD L EAR
Pierced left eyebrow	PRCD L EYE
Pierced nipple, left	PRCD L NIP
Pierced lip, nonspecific	PRCD LIP
Pierced lip, lower	PRCD LLIP
Pierced nipple, nonspecific	PRCD NIPPL
Pierced nose	PRCD N0SE
Pierced right ear	PRCD R EAR
Pierced right eyebrow	PRCD R EYE
Pierced nipple, right	PRCD R NIP
Pierced tongue	PRCD T0NGU
Pierced lip, upper	PRCD ULIP
Jaw, nonspecific, protruding	PR0T JAW
Protruding lower jaw	PR0T L JAW
Protruding upper jaw	PR0T U JAW

Pockmarks	P0CKMARKS
Abdomen	RTAT ABDM
Ankle, nonspecific	RTAT ANKL
Arm, nonspecific	RTAT ARM
Back	RTAT BACK
Breast, nonspecific	RTAT BRST
Buttocks, nonspecific	RTAT BUTTK
Calf, nonspecific	RTAT CALF
Cheek (face), nonspecific	RTAT CHEEK
Chest	RTAT CHEST
Chin	RTAT CHIN
Ear, nonspecific	RTAT EAR
Elbow, nonspecific	RTAT ELB0W
Eye, nonspecific, remove tattoo	RTAT EYE
Face, nonspecific (Use the MIS field to further describe location)	RTAT FACE
Forearm, nonspecific	RTAT FARM
Forehead	RTAT FHD
Full body	RTAT FLB0D
Finger, nonspecific	RTAT FNGR
Foot, nonspecific	RTAT F00T
Groin Area	RTAT GR0IN
Hand, nonspecific	RTAT HAND
Head, nonspecific (Use the MIS fieldo further describe location)	RTAT HEAD
Hip, nonspecific	RTAT HIP
Knee, nonspecific	RTAT KNEE
Arm, left	RTAT L ARM
Cheek (face), left	RTAT L CHK
Ear, left	RTAT L EAR
Elbow, left	RTAT L ELB
Left Eye, remove tattoo	RTAT L EYE
Finger(s), left hand	RTAT L FGR
Hip, left	RTAT L HIP
Hand, left	RTAT L HND
Leg, left	RTAT L LEG
Left Toe, remove tattoo	RTAT L T0E
Ankle, left	RTAT LANKL
Breast, left	RTAT LBRST
Buttocks, left	RTAT LBUTK
Calf, left	RTAT LCALF
Leg, nonspecific	RTAT LEG
Forearm, left	RTAT LFARM
Foot, left	RTAT LF00T
Lip, nonspecific	RTAT LIP
Knee, left	RTAT LKNEE

Shoulder, left	RTAT LSHLD
Thigh, left	RTAT LTHGH
Lip, lower	RTAT LWLIP
Wrist, left	RTAT LWRS
Neck	RTAT NECK
Nose	RTAT N0SE
Penis	RTAT PENIS
Arm, right (Use the MIS field to further describe location)	RTAT R ARM
Cheek (face), right	RTAT R CHK
Ear, right	RTAT R EAR
Elbow, right	RTAT R ELB
Right Eye, remove tattoo	RTAT R EYE
Finger(s), right hand	RTAT R FGR
Hip, right	RTAT R HIP
Hand, right	RTAT R HND
Leg, right (Use the MIS field tourther describe location)	RTAT R LEG
Right Toe, remove tattoo	RTAT R T0E
Angle, right	RTAT RANKL
Breast, right	RTAT RBRST
Buttocks, right	RTAT RBUTK
Calf, right	RTAT RCALF
Forearm, right	RTAT RFARM
Foot, right	RTAT RF00T
Knee, right	RTAT RKNEE
Shoulder, right	RTAT RSHLD
Thigh, right	RTAT RTHGH
Wrist, right	RTAT RWRS
Shoulder, nonspecific	RTAT SHLD
Thigh, nonspecific	RTAT THGH
Toe(s), nonspecific, remove tattoo	RTAT T0E
Arm, left upper	RTAT ULARM
Lip, upper	RTAT UPLIP
Arm, right upper	RTAT URARM
Wrist, nonspecific	RTAT WRS
Abdomen	SC ABD0M
Ankle, nonspecific	SC ANKL
Arm, nonspecific	SC ARM
Back	SC BACK
Breast, nonspecific	SC BREAST
Buttocks, nonspecific	SC BUTTK
Calf, nonspecific	SC CALF
Chest	SC CHEST
Chin	SC CHIN
Cheek, nonspecific	SC CHK
Ear, nonspecific	SC EAR

Elbow, nonspecific	SC ELB0W
Eyebrow, nonspecific	SC EYE
Forearm, nonspecific	SC F ARM
Face, nonspecific (use MIS field to further describe location)	SC FACE
Finger, nonspecific	SC FGR
Forehead	SC FHD
Foot, nonspecific	SC F00T
Groin area	SC GR0IN
Hand, nonspecific	SC HAND
Head, nonspecific (use MIS field to further describe location)	SC HEAD
Hip, nonspecific	SC HIP
Knee, nonspecific	SC KNEE
Ankle, left	SC L ANKL
Arm, left, nonspecific	SC L ARM
Breast, left	SC L BRST
Buttocks, left	SC L BUTTK
Calf, left	SC L CALF
Cheek, left	SC L CHK
Ear, left	SC L EAR
Elbow, left	SC L ELB
Eyebrow, left/left eye area	SC L EYE
Finger(s), left hand	SC L FGR
Foot, left	SC L FT
Hip, left	SC L HIP
Hand, left	SC L HND
Knee, left	SC L KNEE
Leg, left	SC L LEG
Shoulder, left	SC L SHLD
Thigh, left	SC L THGH
Left Toe, scar	SC L T0E
Wrist, left	SC L WRIST
Leg, nonspecific	SC LEG
Forearm, left	SC LF ARM
Lip, nonspecific	SC LIP
Lip, lower	SC L0W LIP
Neck	SC NECK
Nose	SC N0SE
Penis	SC PENIS
Ankle, right	SC R ANKL
Arm, right, nonspecific	SC R ARM
Breast, right	SC R BRST
Buttocks, right	SC R BUTTK
Calf, right	SC R CALF
Cheek, right	SC R CHK
Ear, right	SC R EAR
Elbow, right	SC R ELB

Eyebrow, right/right eye area	SC R EYE
Finger(s), right hand	SC R FGR
Foot, right	SC R FT
Hip, right	SC R HIP
Hand, right	SC R HND
Knee, right	SC R KNEE
Leg, right	SC R LEG
Shoulder, right	SC R SHLD
Thigh, right	SC R THGH
Right Toe, scar	SC R T0E
Wrist, right	SC R WRIST
Forearm, right	SC RF ARM
Shoulder, nonspecific	SC SHLD
Thigh, nonspecific	SC THGH
Toe(s), nonspecific, scar	SC T0E
Arm, left upper	SC UL ARM
Lip, upper	SC UP LIP
Arm, right upper	SC UR ARM
Wrist, nonspecific	SC WRIST
Shorter left leg	SHRT L LEG
Leg, nonspecific, short	SHRT LEG
Shorter right leg	SHRT R LEG
Shunt, arterial vascular	SHUNT ART
Shunt, cerebral ventricule	SHUNT CERB
Skull plate	SKL PLATE
Silver tooth	SLVR T00TH
Staples	STAPLES
Stutters	STUTTERS
Abdomen	TAT ABD0M
Ankle, nonspecific	TAT ANKL
Arm, nonspecific	TAT ARM
Back	TAT BACK
Breast	TAT BREAST
Buttocks	TAT BUTTK
Calf, nonspecific	TAT CALF
Cheek (face), nonspecific	TAT CHEEK
Chest	TAT CHEST
Chin	TAT CHIN
Ear, nonspecific	TAT EAR
Elbow, nonspecific	TAT ELB0W
Eye, nonspecific, tattoo	TAT EYE
Face, nonspecific (use MIS field to further describe location)	TAT FACE
Forearm, nonspecific	TAT FARM
Forehead	TAT FHD

Full Body (Use only when the entire body - arms, legs, chest, and back are covered with tattoos.)	TAT FLB0DY
Finger, nonspecific	TAT FNGR
Foot, nonspecific	TAT F00T
Groin area	TAT GR0IN
Hand, nonspecific	TAT HAND
Head, nonspecific (use MIS field to further describe location)	TAT HEAD
Hip, nonspecific	TAT HIP
Knee, nonspecific	TAT KNEE
Ankle, left	TAT L ANKL
Arm, left	TAT L ARM
Breast, left	TAT L BRST
Buttock, left	TAT L BUTK
Calf, left	TAT L CALF
Cheek (face), left	TAT L CHK
Ear, left	TAT L EAR
Left Eye, tattoo	TAT L EYE
Finger(s), left hand	TAT L FGR
Foot, left	TAT L F00T
Hip, left	TAT L HIP
Hand, left	TAT L HND
Knee, left	TAT L KNEE
Leg, left, nonspecific	TAT L LEG
Shoulder, left	TAT L SHLD
Thigh, left	TAT L THGH
Left Toe, tattoo	TAT L T0E
Wrist, left	TAT L WRS
Leg, nonspecific	TAT LEG
Elbow, left	TAT LELB0W
Forearm, left	TAT LF ARM
Lip, nonspecific	TAT LIP
Lip, lower	TAT LW LIP
Neck	TAT NECK
Nose	TAT N0SE
Penis	TAT PENIS
Ankle, right	TAT R ANKL
Arm, right	TAT R ARM
Breast, right	TAT R BRST
Buttock, right	TAT R BUTK
Calf, right	TAT R CALF
Cheek (face), right	TAT R CHK
Ear, right	TAT R EAR
Right Eye, tattoo	TAT R EYE
Finger(s), right hand	TAT R FGR

Foot, right	TAT R F00T
Hip, right	TAT R HIP
Hand, right	TAT R HND
Knee, right	TAT R KNEE
Leg, right, nonspecific	TAT R LEG
Shoulder, right	TAT R SHLD
Thigh, right	TAT R THGH
Right Toe, tattoo	TAT R T0E
Wrist, right	TAT R WRS
Elbow, right	TAT RELB0W
Forearm, right	TAT RF ARM
Shoulder, nonspecific	TAT SHLD
Thigh, nonspecific	TAT THGH
Toe(s), nonspecific, tattoo	TAT T0E
Arm, left upper	TAT UL ARM
Lip, upper	TAT UP LIP
Arm, right upper	TAT UR ARM
Wrist, nonspecific	TAT WRS
Anticonvulsants (seizure medicines - includes: Dilantin Mysoline, Phenobarbital, etc.)	TD AC0NVUL
Antidepressants (mood-lifters - (Mood lifters - includes: Amitriptylene, Elavil, Norpramine, Prozac, Triavil, Zoloft, etc.)	TD ADEPRES
Analgesics (pain relievers -includes: Darvon, Acetominophen, Aspirin, etc.)	TD ANALGES
Antibiotics	TD ANTBTCS
Anti-Inflammatory Medication	TD ANTINFL
Bronchial Dilators (Includes inhalers)	TD BRNCHDL
Cardiac (heart medications - includes: Digitalis, Digoxin, etc.)	TD CARDIAC
Hypnotics (sleeping aides -includes: Barbiturates, Chloral Hydrate, Glutethemide, etc.)	TD HYPN0TI
Insulin	TD INSULIN
Ritalin	TD RITALIN
Tranquilizers (includes: Valium, Thorazine, Stellazine, etc.)	TD TRANQUI

Other therapeutic medications not listed above, identify in the MIS Field.	TD 0THER
Transsexual (Miscellaneous field should indicate what the individual was at birth and what they are at the time the record is entered into NCIC.)	TRANSSXL
Transvestite	TRANSVST
Tube in left ear	TUBE L EAR
Tube in right ear	TUBE R EAR
Vascular prosthesis	VASC PR0TH
Wheelchair	WHEELCHAIR
Wire sutures	WIRE SUTUR
Orthopedic nail or pin	0RTH NAIL
Orthopedic plate	0RTH PLATE
Orthopedic screw	0RTH SCREW

Annex F Example transaction
(informative)

This annex contains an example of the use of the standard for the interchange of specific types of biometric image data between different systems or organizations. The TOT code is fictional and used to represent a transaction for submitting fingerprint, mugshot, and palmprint image data to a remote system. In addition to the Type-1 record, this transaction includes eight other records. It contains a Type-2 user-defined descriptive text record, a Type-10 mugshot record, three Type-14 variable resolution tenprint image records, two Type-15 variable resolution records containing a full and writer's palmprint image, and a Type-99 CBEFF record. A scanning resolution of 19.69 ppmm (500 ppi) was used for the fingerprint and palmprint images. The WSQ Version 2.0 compression algorithm was used to compress these images to approximately 15:1. For the mugshot image, a JPEG Baseline algorithm was used to compress the image to approximately 20:1.

The example of a Type-99 CBEFF Data Record contains a Biometric Data Block (BDB) that is formatted in a fictional INCITS M1 body odor data interchange format. M1 is a registered BDB format owner and has (fictionally) assigned a BDB Format Type code of 0xABCD Hex to this data format. The <binary data> in the BDB field of this record is the body odor BDB which contains 100,000 bytes.

	Type-1 Transaction Record
LENGTH (LEN)	1.001: 245 $^{G}_{S}$
VERSION (VER)	1.002:0400 $^{G}_{S}$
CONTENT (CNT)	1.003:1 $^{U}_{S}$ 8 $^{R}_{S}$ 2 $^{U}_{S}$ 00 $^{R}_{S}$ 10 $^{U}_{S}$ 01 $^{R}_{S}$ 14 $^{U}_{S}$ 02 $^{R}_{S}$ 14 $^{U}_{S}$ 03 $^{R}_{S}$ 14 $^{U}_{S}$ 04 $^{R}_{S}$ 15 $^{U}_{S}$ 05 $^{R}_{S}$ 15 $^{U}_{S}$ 06 $^{R}_{S}$ 99 $^{U}_{S}$ 07 $^{G}_{S}$
TYPE OF TRANSACTION (TOT)	1.004:XXX $^{G}_{S}$
DATE (DAT)	1.005:20071120 $^{G}_{S}$
PRIORITY (PRY)	1.006:1 $^{G}_{S}$
DESTINATION AGENCY IDENTIFIER (DAI)	1.007:DCFBIWA6Z $^{G}_{S}$
ORIGINATING AGENCY IDENTIFIER (ORI)	1.008:NY0303000SLAS01000 $^{G}_{S}$
TRANSACTION CONTROL NUMBER (TCN)	1.009:1234567890 $^{G}_{S}$
TRANSACTION CONTROL REFERENCE (TCR)	1.010:2345678901 $^{G}_{S}$

NATIVE SCANNING RESOLUTION (NSR)	1.011:19.69 $^{G}_{S}$
TRANSMITTING RESOLUTION (NTR)	1.012:19.69 $^{G}_{S}$
DOMAIN NAME (DOM)	1.013:NORAM $^{U}_{S}$ $^{G}_{S}$
GREENWICH MEAN TIME (GMT)	1.014:20071120235745Z $^{F}_{S}$

Type-2 User-Defined Descriptive Text Record

LENGTH (LEN)	2.001:813 $^{G}_{S}$
IMAGE DESIGNATION CHARACTER (IDC)	2.002:00 $^{G}_{S}$
USER-DEFINED INFORMATION	(793 ASCII TEXT CHARACTERS) $^{F}_{S}$

Type-10 Facial / Mugshot Record

LENGTH (LEN)	10.001:14750 $^{G}_{S}$
IMAGE DESIGNATION CHARACTER (IDC)	10.002:01 $^{G}_{S}$
IMAGE TYPE (IMT)	10.003:FACE $^{G}_{S}$
SOURCE AGENCY (SRC)	10.004:NY0303000SLAS01000 $^{G}_{S}$
PHOTO DATE (PHD)	10.005:20071120 $^{G}_{S}$
HORIZONTAL LINE LENGTH (HLL)	10.006:480 $^{G}_{S}$
VERTICAL LINE LENGTH (VLL)	10.007:600 $^{G}_{S}$
SCALE UNITS (SLC)	10.008:0 $^{G}_{S}$
HORIZONTAL PIXEL SCALE (HPS)	10.009:1 $^{G}_{S}$
VERTICAL PIXEL SCALE (VPS)	10.010:1 $^{G}_{S}$
COMPRESSION ALGORITHM (CGA)	10.011:JPEGB $^{G}_{S}$

COLOR SPACE (CSP)	10.012:YCC $^{G}_{S}$
SUBJECT ACQUISITION PROFILE (SAP)	10.013:30 $^{G}_{S}$
SUBJECT POSE (POS)	10.020:D $^{G}_{S}$
POSE OFFSET ANGLE (POA)	10.021:-45 $^{G}_{S}$
PHOTO DESCRIPTION (PXS)	10.022:HAT $^{R}_{S}$ GLASSES $^{G}_{S}$
PHOTO ACQUISITION SOURCE (PAS)	10.023:DIGITAL CAMERA $^{G}_{S}$
SUBJECT QUALITY SCORE (SQS)	10.024:88 $^{U}_{S}$ 000F $^{U}_{S}$ 99 $^{G}_{S}$
SUBJECT POSE ANGLE (SPA)	10.025:+45 $^{U}_{S}$ 0 $^{U}_{S}$ 0 $^{U}_{S}$ $^{U}_{S}$ $^{U}_{S}$ $^{G}_{S}$
SUBJECT FACIAL DESCRIPTION (SXS)	10.026:OPEN MOUTH $^{G}_{S}$
SUBJECT EYE COLOR (SEC)	10.027:BLU $^{G}_{S}$
SUBJECT HAIR COLOR (SHC)	10.028:BAL $^{R}_{S}$ GRY $^{G}_{S}$
FACIAL FEATURE POINTS (FFP)	10.029:1 $^{U}_{S}$ 12.2 $^{U}_{S}$ 120 $^{U}_{S}$ 130 $^{R}_{S}$ 1 $^{U}_{S}$ 12.1 $^{U}_{S}$ 240 $^{U}_{S}$ 129 $^{G}_{S}$
IMAGE DATA (DAT)	10.999:
SOI & APP0 Marker Segment	X'FFD8', X'FFE0', X'0010', X'4A46494600', X'0102', X'00', X'0001', X'0001', X'00', X'00',
Compressed Image Data	<14382 BYTES FACIAL DATA COMPR. @ 20:1>
End Of Image Marker Code	X'FFD9' $^{F}_{S}$

Type-14 Variable-Resolution Fingerprint Image Records

1ST TYPE-14 RECORD (PLAIN RIGHT FOUR)

LOGICAL RECORD LENGTH (LEN)	14.001:107280 $^{G}_{S}$
IMAGE DESIGNATION CHARACTER (IDC)	14.002:02 $^{G}_{S}$

IMPRESSION TYPE (IMP)	14.003:20 $^{G}_{S}$
SOURCE AGENCY (SRC)	14.004:NY0303000SLAS01000 $^{G}_{S}$
CAPTURE DATE (FCD)	14.005:20071120 $^{G}_{S}$
HORIZONTAL LINE LENGTH (HLL)	14.006:1600 $^{G}_{S}$
VERTICAL LINE LENGTH (VLL)	14.007:1000 $^{G}_{S}$
SCALE UNITS (SLC)	14.008:2 $^{G}_{S}$
HORIZONTAL PIXEL SCALE (HPS)	14.009:197 $^{G}_{S}$
VERTICAL PIXEL SCALE (VPS)	14.010:197 $^{G}_{S}$
COMPRESSION ALGORITHM (CGA)	14.011:WSQ20 $^{G}_{S}$
BITS PER PIXEL (BPX)	14.012:8 $^{G}_{S}$
FINGER POSITION (FGP)	14.013:13 $^{G}_{S}$
FINGERPRINT SEGMENTATION POSITION(S) (SEG)	14.021:2 $^{U}_{S}$ 125 $^{U}_{S}$ 420 $^{U}_{S}$ 675 $^{U}_{S}$ 1045 $^{R}_{S}$ 3 $^{U}_{S}$ 430 $^{U}_{S}$ 740 $^{U}_{S}$ 475 $^{U}_{S}$ 900 $^{R}_{S}$ 4 $^{U}_{S}$ 775 $^{U}_{S}$ 1075 $^{U}_{S}$ 665 $^{U}_{S}$ 1095 $^{R}_{S}$ 5 $^{U}_{S}$ 1075 $^{U}_{S}$ 1325 $^{U}_{S}$ 1050 $^{U}_{S}$ 1400 $^{G}_{S}$
NIST QUALITY METRIC (NQM)	14.022:2 $^{U}_{S}$ 2 $^{R}_{S}$ 3 $^{U}_{S}$ 1 $^{R}_{S}$ 4 $^{U}_{S}$ 1 $^{R}_{S}$ 5 $^{U}_{S}$ 2 $^{G}_{S}$
IMAGE DATA (DAT)	14.999: <107KB OF DATA COMPRESSED @ 15:1> $^{F}_{S}$

<u>2ND TYPE-14 RECORD (PLAIN LEFT FOUR)</u>

LOGICAL RECORD LENGTH (LEN)	14.001:107282 $^{G}_{S}$
IMAGE DESIGNATION CHARACTER (IDC)	14.002:03 $^{G}_{S}$
IMPRESSION TYPE (IMP)	14.003:20 $^{G}_{S}$
SOURCE AGENCY (SRC)	14.004:NY0303000SLAS01000 $^{G}_{S}$

CAPTURE DATE (FCD)	14.005:20071120 $^{G}_{S}$
HORIZONTAL LINE LENGTH (HLL)	14.006:1600 $^{G}_{S}$
VERTICAL LINE LENGTH (VLL)	14.007:1000 $^{G}_{S}$
SCALE UNITS (SLC)	14.008:2 $^{G}_{S}$
HORIZONTAL PIXEL SCALE (HPS)	14.009:197 $^{G}_{S}$
VERTICAL PIXEL SCALE (VPS)	14.010:197 $^{G}_{S}$
COMPRESSION ALGORITHM (CGA)	14.011:WSQ20 $^{G}_{S}$
BITS PER PIXEL (BPX)	14.012:8 $^{G}_{S}$
FINGER POSITION (FGP)	14.013:14 $^{G}_{S}$
FINGERPRINT SEGMENTATION POSITION(S) (SEG)	14.021:7 $^{U}_{S}$ 1080 $^{U}_{S}$ 1375 $^{U}_{S}$ 675 $^{U}_{S}$ 1045 $^{R}_{S}$ 8 $^{U}_{S}$ 760 $^{U}_{S}$ 1070 $^{U}_{S}$ 475 $^{U}_{S}$ 900 $^{R}_{S}$ 9 $^{U}_{S}$ 425 $^{U}_{S}$ 725 $^{U}_{S}$ 665 $^{U}_{S}$ 1095 $^{R}_{S}$ 10 $^{U}_{S}$ 175 $^{U}_{S}$ 425 $^{U}_{S}$ 1050 $^{U}_{S}$ 1400 $^{G}_{S}$
NIST QUALITY METRIC (NQM)	14.022:7 $^{U}_{S}$ 1 $^{R}_{S}$ 8 $^{U}_{S}$ 2 $^{R}_{S}$ 9 $^{U}_{S}$ 2 $^{R}_{S}$ 10 $^{U}_{S}$ 2 $^{G}_{S}$
IMAGE DATA (DAT)	14.999: <107KB OF DATA COMPRESSED @ 15:1> $^{F}_{S}$

<u>3RD TYPE-14 RECORD (TWO THUMBS)</u>

LOGICAL RECORD LENGTH (LEN)	14.001:70235 $^{G}_{S}$
IMAGE DESIGNATION CHARACTER (IDC)	14.002:04 $^{G}_{S}$
IMPRESSION TYPE (IMP)	14.003:20 $^{G}_{S}$
SOURCE AGENCY (SRC)	14.004:NY0303000SLAS01000 $^{G}_{S}$
CAPTURE DATE (FCD)	14.005:20071120 $^{G}_{S}$
HORIZONTAL LINE LENGTH (HLL)	14.006:1600 $^{G}_{S}$

VERTICAL LINE LENGTH (VLL)	14.007:1000 $^{G}_{S}$
SCALE UNITS (SLC)	14.008:2 $^{G}_{S}$
HORIZONTAL PIXEL SCALE (HPS)	14.009:197 $^{G}_{S}$
VERTICAL PIXEL SCALE (VPS)	14.010:197 $^{G}_{S}$
COMPRESSION ALGORITHM (CGA)	14.011:WSQ20 $^{G}_{S}$
BITS PER PIXEL (BPX)	14.012:8 $^{G}_{S}$
FINGER POSITION (FGP)	14.013:15 $^{G}_{S}$
FINGERPRINT SEGMENTATION POSITION(S) (SEG)	14.021:11 $^{U}_{S}$ 415 $^{U}_{S}$ 745 $^{U}_{S}$ 1025 $^{U}_{S}$ 1450 $^{R}_{S}$ 12 $^{U}_{S}$ 750 $^{U}_{S}$ 1080 $^{U}_{S}$ 1025 $^{U}_{S}$ 1450 $^{G}_{S}$
NIST QUALITY METRIC (NQM)	14.022:11 $^{U}_{S}$ 2 $^{R}_{S}$ 12 $^{U}_{S}$ 1 $^{G}_{S}$
IMAGE DATA (DAT)	14.999: <70KB OF DATA COMPRESSED @ 15:1> $^{F}_{S}$

Type-15 Variable-Resolution Palmprint Records

1ST TYPE-15 RECORD (FULL RIGHT PALM)

LENGTH (LEN)	15.001:733170 $^{G}_{S}$
IMAGE DESIGNATION CHARACTER (IDC)	15.002:05 $^{G}_{S}$
IMPRESSION TYPE (IMP)	15.003:20 $^{G}_{S}$
SOURCE AGENCY (SRC)	15.004:NY0303000SLAS01000 $^{G}_{S}$
PALMPRINT CAPTURE DATE (PCD)	15.005:20071120 $^{G}_{S}$
HORIZONTAL LINE LENGTH (HLL)	15.006:2750 $^{G}_{S}$
VERTICAL LINE LENGTH (VLL)	15.007:4000 $^{G}_{S}$
SCALE UNITS (SLC)	15.008:2 $^{G}_{S}$

HORIZONTAL PIXEL SCALE (HPS)	15.009:197 $^{G}_{S}$
VERTICAL PIXEL SCALE (VPS)	15.010:197 $^{G}_{S}$
COMPRESSION ALGORITHM (CGA)	15.011:WSQ20 $^{G}_{S}$
BITS PER PIXEL (BPX)	15.012:8 $^{G}_{S}$
PALMPRINT POSITION (PLP)	15.020:21 $^{G}_{S}$
IMAGE DATA (DAT)	15.999: <733KB OF DATA COMPRESSED @ 15:1> $^{F}_{S}$

2ND TYPE-15 RECORD (RIGHT WRITER'S PALM)

LENGTH (LEN)	15.001:146169 $^{G}_{S}$
IMAGE DESIGNATION CHARACTER (IDC)	15.002:06 $^{G}_{S}$
IMPRESSION TYPE (IMP)	15.003:20 $^{G}_{S}$
SOURCE AGENCY (SRC)	15.004:NY0303000SLAS01000 $^{G}_{S}$
PALMPRINT CAPTURE DATE (PCD)	15.005:20071120 $^{G}_{S}$
HORIZONTAL LINE LENGTH (HLL)	15.006:876 $^{G}_{S}$
VERTICAL LINE LENGTH (VLL)	15.007:2500 $^{G}_{S}$
SCALE UNITS (SLC)	15.008:2 $^{G}_{S}$
HORIZONTAL PIXEL SCALE (HPS)	15.009:197 $^{G}_{S}$
VERTICAL PIXEL SCALE (VPS)	15.010:197 $^{G}_{S}$
COMPRESSION ALGORITHM (CGA)	15.011:WSQ20 $^{G}_{S}$
BITS PER PIXEL (BPX)	15.012:8 $^{G}_{S}$
PALMPRINT POSITION (PLP)	15.020:22 $^{G}_{S}$
IMAGE DATA (DAT)	15.999: <146KB OF DATA COMPRESSED @ 15:1> $^{F}_{S}$

Type-99 CBEFF Data Record

LENGTH (LEN)	99.001:100144 $^{G}_{S}$
IMAGE DESIGNATION CHARACTER (IDC)	99.002:07 $^{G}_{S}$
SOURCE AGENCY (SRC)	99.004: NY0303000SLAS01000 $^{G}_{S}$
BIOMETRIC CAPTURE DATE (BCD)	99.005:20071120 $^{G}_{S}$
CBEFF HEADER VERSION (HDV)	99.100:0101 $^{G}_{S}$
BIOMETRIC TYPE (BTY)	99.101:00002000 $^{G}_{S}$
BIOMETRIC DATA QUALITY (BDQ)	99.102:89 $^{U}_{S}$ 9999 $^{U}_{S}$ 99 $^{G}_{S}$
BDB FORMAT OWNER (BFO)	99.103:001B $^{G}_{S}$
BDB FORMAT TYPE (BFT)	99.104:ABCD $^{G}_{S}$
BIOMETRIC DATA BLOCK (BDB)	99.999: <100KB OF DATA > $^{F}_{S}$

Annex G INCITS / M1 378 Minutiae Format

(Informative)

Minutia placement and type

For templates to be conformant with Section 5 of the ANSI INCITS 378-2004 standard, the following method, which enhances the current INCITS 378-2004 standard, shall be used for determining placement (location and angular direction) of individual minutiae.

The position or location of a minutia representing a ridge ending shall be the point of forking of the medial skeleton of the valley area immediately in front of the ridge ending. If the three legs of the valley area were thinned down to a single-pixel-wide skeleton, the point of the intersection is the location of the minutia. Similarly, the location of the minutia for a bifurcation shall be the point of forking of the medial skeleton of the ridge. If the three legs of the ridge were each thinned down to a single-pixel-wide skeleton, the point where the three legs intersect is the location of the minutia.

After all ridge endings have been converted to bifurcations, all of the minutiae of the fingerprint image are represented as bifurcations. The X and Y pixel coordinates of the intersection of the three legs of each minutia can be directly formatted. Determination of the minutia direction can be extracted from each skeleton bifurcation. The three legs of every skeleton bifurcation must be examined and the endpoint of each leg determined. Figure G1 illustrates the three methods used for determining the end of a leg that is based on a scanning resolution of 500 ppi. The ending is established according to the event that occurs first. The pixel count is based on a scan resolution of 500 ppi. Different scan resolutions would imply different pixel counts.

- A distance of .064" (the 32nd pixel)
- The end of skeleton leg that occurs between a distance of .02" and .064" (the 10th through the 32nd pixels); shorter legs are not used
- A second bifurcation is encountered within a distance of .064" (before the 32nd pixel)

Figure G1 Minutiae angle components

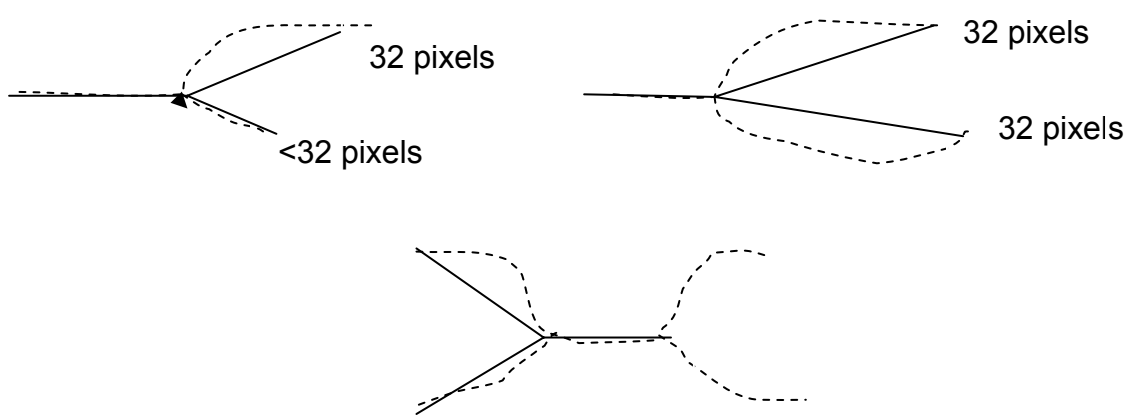

The angle of the minutiae is determined by constructing three virtual rays originating at the bifurcation point and extending to the end of each leg. The smallest of the three angles formed by the rays is bisected to indicate the minutiae direction.

Coordinate system

The coordinate system used to express the minutiae of a fingerprint shall be a Cartesian coordinate system. Minutiae locations shall be represented by their *x* and *y* coordinates. The origin of the coordinate system shall be the upper left corner of the original image with *x* increasing to the right and *y* increasing downward. Both *x* and *y* coordinates of a minutiae shall be represented in pixel units from the origin. It should be noted that the location of the origin and units of measure is not in agreement with the convention used in the “standard format” definitions of Section14.1.

Minutiae direction

Angles are expressed in standard mathematical format, with zero degrees to the right and angles increasing in the counterclockwise direction. Recorded angles are in the direction pointing back along the ridge for a ridge ending and toward the center of the valley for a bifurcation. This convention is 180 degrees opposite of the angle convention described in the “standard format” definitions of Section 14.1.4.

Fields for Type-9 logical record INCITS-378 Format

For purposes of this standard, no proprietary information shall be contained in any of the information and data specified by the M1-378 block of information items. Therefore, the following descriptions are presented for each of the fields in this Type-9 block. All fields of the Type-9 records shall be recorded as ASCII text. No binary fields are permissible in this tagged-field record. The first four fields are mandatory and retain the same meaning a described in Sections 14.2.1 through 14.2.4.

Field 9.001: Logical record length (LEN)

This mandatory ASCII field shall contain the length of the logical record specifying the total number of bytes, including every character of every field contained in the record.

Field 9.002: Image designation character (IDC)

This mandatory field shall be used for the identification and location of the minutiae data. The IDC contained in this field shall match the IDC found in the file content (CNT) field of the Type-1 record.

Field 9.003: Impression type (IMP)

This mandatory one- or two-byte ASCII field shall describe the manner by which the fingerprint or palmprint image information was obtained. The ASCII value of the proper code as selected from Table 11 shall be entered in this field to signify the impression type.

Field 9.004: Minutiae format (FMT)

This field shall contain a "U" to indicate that the minutiae are formatted in M1-378 terms. Even though information may be encoded in accordance with the M1-378 standard, all data fields of the Type-9 record must remain as ASCII text fields.

Field 9.126: CBEFF information

This mandatory field shall contain three information items. The first information item shall contain the value "27". This is the identification of the CBEFF Format Owner assigned by the International Biometric Industry Association (IBIA) to INCITS Technical Committee M1. The “US” character shall delimit this item from the CBEFF Format Type that is assigned a value of "513" to indicate that this record contains only location and angular direction data without any Extended Data Block information. A value of “514” indicates the presence of extended data. The “US” character shall delimit this item from the CBEFF Product Identifier (PID) that identifies the "owner" of the encoding equipment. The vendor establishes this value. It can be obtained from the IBIA website (www.ibia.org) if it is posted.

Field 9.127: Capture equipment identification

This mandatory field shall contain two information items separated by the “US” character. The first shall contain "APPF" if the equipment used originally to acquire the image was certified to conform with Appendix F (IAFIS Image Quality Specification, January 29, 1999) of CJIS-RS-0010, the Federal Bureau of Investigation's Electronic Fingerprint Transmission Specification. If the equipment did not conform it will contain the value of "NONE". The second information item shall contain the Capture Equipment ID which is a vendor-assigned product number of the capture equipment. A value of "0" indicates that the capture equipment ID is unreported.

Field 9.128: Horizontal line length (HLL)

This mandatory ASCII field shall contain the number of pixels contained on a single horizontal line of the transmitted image. The maximum horizontal size is limited to 65,534 pixels.

Field 9.129: Vertical line length (VLL)

This mandatory ASCII field shall contain the number of horizontal lines contained in the transmitted image. The maximum vertical size is limited to 65,534 pixels.

Field 9.130: Scale units (SLC)

This mandatory ASCII field shall specify the units used to describe the image sampling frequency (pixel density). A "1" in this field indicates pixels per inch, or a "2" indicates pixels per centimeter. A "0" in this field indicates no scale is given. For this case, the quotient of HPS/VPS gives the pixel aspect ratio.

Field 9.131: Horizontal pixel scale (HPS)

This mandatory ASCII field shall specify the integer pixel density used in the horizontal direction providing the SLC contains a "1" or a "2". Otherwise, it indicates the horizontal component of the pixel aspect ratio.

Field 9.132: Vertical pixel scale (VPS)

This mandatory ASCII field shall specify the integer pixel density used in the vertical direction providing the SLC contains a "1" or a "2". Otherwise, it indicates the vertical component of the pixel aspect ratio.

Field 9.133: Finger view

This mandatory field contains the view number of the finger associated with this record's data. The view number begins with "0" and increments by one to "15".

Field 9.134: Finger position

This mandatory field shall contain the code designating the finger position that produced the information in this Type-9 record. A code between 1 and 10 taken from Table 12 shall be used to indicate the finger position.

Field 9.135: Finger quality

This mandatory field shall contain the quality of the overall finger minutiae data.

Each subfield shall contain three information items separated by the "US" separator character. They identify a quality score and the algorithm used to create the quality score. This information is useful to enable the recipient of the quality score to differentiate between quality scores generated by different algorithms and adjust for any differences in processing or analysis as necessary.

1. The first information item shall be a quantitative expression of the predicted matching performance of the biometric sample. This item contains the ASCII representation of the integer image quality score between 0 and 100 assigned to the image data by a quality algorithm. Higher values indicate better quality. An entry of “255” shall indicate a failed attempt to calculate a quality score. An entry of “254” shall indicate that no attempt to calculate a quality score was made. The use of additional values to convey other information should be harmonized with ISO/IEC 19794 standards.

2. The second information item shall specify the ID of the vendor of the quality algorithm used to calculate the quality score. This 4-digit hex value is assigned by IBIA and expressed as four ASCII characters. The IBIA shall maintain the Vendor Registry of CBEFF Biometric Organizations that will map the value in this field to a registered organization.

3. The third information item shall specify a numeric product code assigned by the vendor of the quality algorithm, which may be registered with the IBIA, but it is not required to be registered. It indicates which of the vendor’s algorithms was used in the calculation of the quality score. This field contains the ASCII representation of the integer product code and should be within the range 1 to 65535.

Field 9.136: Number of minutiae

The mandatory field shall contain a count of the number of minutiae recorded in this logical record.

Field 9.137: Finger minutiae data

This mandatory field has six information items separated by the “US” character. It consists of several subfields, each containing the details for a single minutiae. The total number of minutiae subfields must agree with the count found in field 136. The first information item is the minutiae index number, which shall be initialized to “1” and incremented by “1” for each additional minutia in the fingerprint. The second and third information items are the 'x' coordinate and 'y' coordinates of the minutiae in pixel units. The fourth information item is the minutiae angle recorded in units of two degrees. This value shall be nonnegative between 0 and 179. The fifth information item is the minutiae type. A value of "0" is used to represent a minutiae of type "OTHER", a value of "1" for a ridge ending and a value of "2" for a ridge bifurcation. The sixth information item represents the quality of each minutiae. This value shall range from 1 as a minimum to 100 as a maximum. A value of "0" indicates that no quality value is available. Each subfield shall be separated from the next with the use of the “RS” separator character.

Field 9.138: Ridge count information

This field shall consists of a series of subfields each containing three information items. The first information item of the first subfield shall indicate the ridge count extraction method. A “0” indicates that no assumption shall be made about the method used to extract ridge counts, nor their order in the record. A “1” indicates that for each center minutiae, ridge count data was extracted to the nearest neighboring minutiae in four quadrants, and ridge counts for each center minutia are listed together. A “2” indicates that for each center minutiae, ridge count data was extracted to the nearest neighboring minutiae in eight octants, and ridge counts for each center minutia are listed together. The remaining two information items of this first subfield shall each contain “0”. Information items shall be separated by the “US” separator character. Subsequent subfields will contain the center minutiae index number as the first information item, the neighboring minutiae index number as the second information item, and the number of ridges crossed as the third information item. Subfields shall be separated by the “RS” separator character.

Field 9.139: Core information

This field will consist of one subfield for each core present in the original image. Each subfield consists of three information items. The first two items contains the ‘x’ and ‘y’ coordinate positions in pixel units. The third information item contains the angle of the core recorded in units of 2 degrees. The value shall be a nonnegative value between 0 and 179. Multiple cores will be separated by the “RS” separator character.

Field 9.140: Delta information

This field will consist of one subfield for each delta present in the original image. Each subfield consists of three information items. The first two items contains the ‘x’ and ‘y’ coordinate positions in pixel units. The third information item contains the angle of the delta recorded in units of 2 degrees. The value shall be a nonnegative value between 0 and 179. Multiple cores will be separated by the “RS” separator character.

Annex H Best Practice Application Level 30
(Informative)

BEST PRACTICE RECOMMENDATION

FOR THE CAPTURE OF MUGSHOTS

Version 2.0

September 23, 1997

The original version of the •Best Practice Recommendation• was initiated at the Mugshot and Facial Image Workshop which was held in Gaithersburg, MD on October 23-25, 1995. Developed as a recommendation, the implementation of the practices and principles described in that document makes the conversion of existing and ongoing photographic collections more uniform. It contains a suggested set of procedures and equipment specifications for organizations considering the purchase of new systems or the upgrade of current systems. The recommendation is not designed to render current and legacy mugshot collections unacceptable. Rather, it is intended as a means of establishing or improving interoperability between mugshot systems.

The information contained in this updated revision of the •Best Practice Recommendation•, Version 2.0, does not alter any of the individual points that were consensually agreed upon and included in the original version of this recommendation. It does provide additional details and clarifications for many of those points and has been supplemented with information regarding depth-of-field and exposure considerations.

This recommendation reflects a minimum set of common denominators. The provisions of this recommendation are keyed to the quality aspects associated with the unaltered captured mugshot image. For new mugshot images being captured, the specifications contained in this recommendation are equally applicable to realtime electronic capture of mugshots as well as the electronic conversion of photographic images. For conversion of legacy files of photographs, most of the provisions of this recommendation are also still applicable. In the future, it should be possible to add additional specifications without contradicting any of the current contents of the recommendation.

* POSE

The full-face or frontal pose is the most commonly used pose in photo lineups and shall always be captured. This pose is in addition to profiles or intermediate angled poses captured to acquire perspective and other information. For subjects who normally wear eyeglasses, a frontal mugshot image should be captured of the subject without glasses. This is required due to the glare from exernal illumination. An additional image can optionally be captured of the subject wearing eyeglasses.

* DEPTH OF FIELD

The subject•s captured facial image shall always be in focus from the nose to the ears. Although this may result in the background behind the subject being out of focus, it is not a problem. For optimum quality of the captured mugshot, the f-stop of the lens should be set at two f-stops below the maximum aperture opening when possible.

* CENTERING

The facial image being captured (full-face pose) shall be positioned to satisfy all of the following conditions:

- The approximate horizontal mid-points of the mouth and of the bridge of the nose shall lie on an imaginary vertical straight line positioned at the horizontal center of the image.

- An imaginary horizontal line through the center of the subject's eyes shall be located at approximately the 55% point of the vertical distance up from the bottom edge of the captured image.

- The width of the subject's head shall occupy approximately 50% of the width of the captured image. This width shall be the horizontal distance between the mid-points of two imaginary vertical lines. Each imaginary line shall be drawn between the upper and lower lobes of each ear and shall be positioned where the external ear connects to the head.

* LIGHTING

Subject illumination shall be accomplished using a minimum of three (3) point balanced illumination. Appropriate diffusion techniques shall also be employed and lights positioned to minimize shadows, and to eliminate hot spots on the facial image. These hot spots usually appear on reflective areas such as cheeks and foreheads. Proper lighting shall contribute to the uniformity of illumination of the background described in the exposure requirement.

* BACKGROUND

The subject whose image is being captured shall be positioned in front of a background which is 18% gray with a plain smooth flat surface. A Kodak or other neutral gray card or densitometer shall be used to verify this 18% gray reflectance requirement.

* EXPOSURE

The exposure shall be keyed to the background. Several areas of the recorded 18% gray background shall be used to verify the proper exposure. The averages of the 8-bit Red, Green, and Blue (RGB) components within each area shall be calculated. Each of the RGB means shall fall between 105 and 125 with a standard deviation of plus or minus 10. Furthermore, for every area examined, the maximum difference between the means of any two of the RGB components shall not exceed 10.

* ASPECT RATIO

The Width:Height aspect ratio of the captured image shall be 1:1.25.

* MINIMUM NUMBER OF PIXELS

The minimum number of pixels in an electronic digital image shall be 480 pixels in the horizontal direction by 600 pixels in the vertical direction. It should be noted that the image quality of the captured mugshots and facial images will be improved as the number of pixels in both directions are increased. However, as images are captured with an increased number of pixels, the 1:1.25 (Width:Height) aspect ratio will be maintained.

Two considerations must be noted regarding this aspect of the recommendation. First, the normal orientation of many available cameras is the landscape format which specifies a greater number of pixels in the horizontal than in the vertical direction. Unless these cameras capture at least 600 pixels in the vertical direction, it may be necessary to rotate the camera 90 degrees. Second, the 480x600 capture format exceeds the VGA display format of 640x480. Therefore, at a minimum, an SVGA specification of 800x600 pixels will be required to display the facial image. The image will occupy less than the total number of available horizontal pixels.

* COLOR SPACE

Captured electronic color facial images are required. Digital images shall be represented as 24-bit RGB pixels. For every pixel, eight (8) bits will be used to represent each of the Red, Green, and Blue components. The RGB color space is the basis for other color spaces including the Y, C_b, C_r and YUV. Additional color management techniques are available from the International Color Consortium. Information regarding these techniques can be downloaded from the following URL: http://www.color.org .

* PIXEL ASPECT RATIO

Digital cameras and scanners used to capture facial images shall use square pixels with a pixel aspect ratio of 1:1.

* COMPRESSION ALGORITHM

The algorithm used to compress mugshot and facial images shall conform to the JPEG Sequential Baseline mode of operation as described in the specification approved by the ANSI X3L3 Standards committee. The target size for a JPEG compressed color mugshot image file shall be 25,000 to 45,000 bytes.

* FILE FORMAT

The JPEG File Interchange Format (JFIF) shall contain the JPEG compressed image data. The JFIF file shall then be part of the transaction file for interchange which conforms to the requirements as contained in ANSI/NIST-CSL 1-1993 and ANSI/NIST-ITL 1a-1997.

Annex I Best Practice Image Capture Requirements for SAP Levels 40, 50, and 51 (Informative)

Introduction

This set of "enhanced best practice recommendation" (EBPR) clauses is a set of constraints. These constraints can be categorized into four types of requirements: scene, photographic, digital, and format. Scene requirements refer to the content, subject and background in the image. Photographic requirements refer to lighting, focus and other constraints required for photo capture. Digital requirements refer to the conversion of the captured image into a digital record. Finally, format requirements refer to additional or conditional required fields and in a Type-10 record or NIST transaction.

Note that the set of requirements applies to all poses of a subject.

Scene Requirements

Number of photographs

Level 50 and 51 records shall include at least five photographs of the subject: frontal, left and right profile, and left and right ¾ profile.

A ¾ profile view consists of a face with a Yaw pose angle of ± 67.5 degrees, and with Pitch and Roll angles of zero (see Section 15.1.23, "Field 10.025: Subject pose angle (SPA)"). Note that for ¾ profile, the orientation of the head is rotated to ¾ profile (the rotation of the body shall not be required), and care should be taken to prevent the subject from keeping the head fixed while changing only the gaze. In addition, for ¾ profile photographs, both eyes must be visible in the image. For full profile images, the entire body shall be rotated with the head.

The "Head and Shoulders" photo composition

The composition consists of a subject's head, partial shoulders, and plain background. For a frontal-facing pose, the width of the subject's head shall occupy approximately 50% of the width of the captured image. This width shall be the horizontal distance between the mid-points of two imaginary vertical lines. Each imaginary line shall be drawn between the upper and lower lobes of each ear and shall be positioned where the external ear connects to the head. A template and an example is shown in Figure I1. For other poses, the composition shall be rotated about an imaginary axis extending from the top of the head though the base of the neck.

This composition is applied to SAP levels 30, 40, and 50.

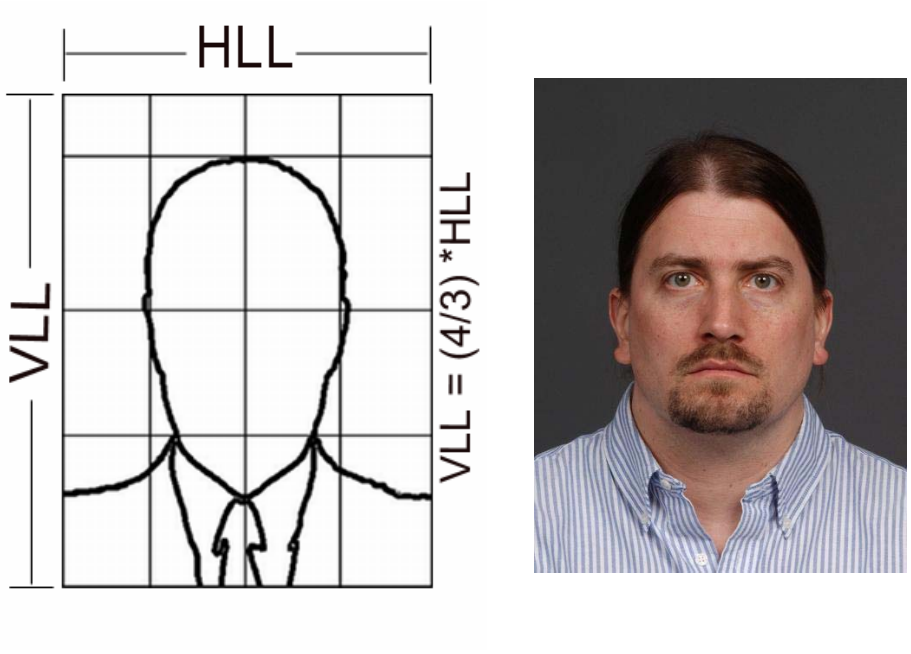

a. A template of the "head and shoulders" photo. The width of the head is ½ the width of the photo.	**b. An example "head and shoulders" photo.**

Figure I1 – A facial image template and an example image that meets "Head and Shoulders" (levels 40 and 50) scene constraints.

<u>The "Head Only" photo composition</u>

The composition consists of a subject's head, and a plain background. For a frontal-facing pose, the width of the subject's head shall occupy approximately 70% of the width of the captured image. This width shall be the horizontal distance between the mid-points of two imaginary vertical lines. Each imaginary line shall be drawn between the upper and lower lobes of each ear and shall be positioned where the external ear connects to the head. A template and an example are shown in Figure I2. For other poses, the composition shall be rotated about an imaginary axis extending from the top of the head though the base of the neck.

This composition is applied to SAP level 51.

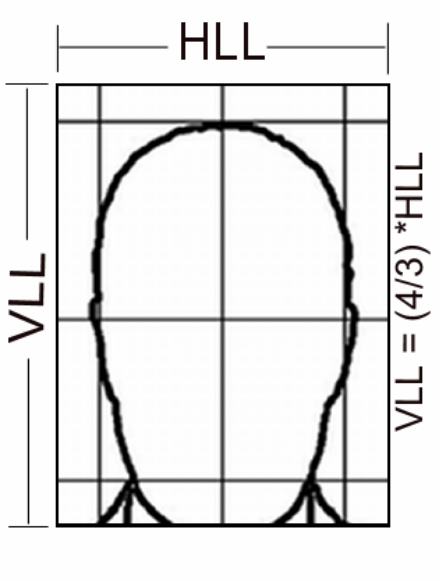

a. A template of the "head only" photo. The width of the head is 7/10th the width of the photo.	**b. An example "head only" photo.**

Figure I2 – A facial image template and an example image that meets "Head Only" (level 51) scene constraints.

Head centering

For the frontal pose, the face shall be positioned to satisfy all of the following conditions:

The approximate horizontal mid-points of the mouth and of the bridge of the nose shall lie on an imaginary vertical straight line positioned at the horizontal center of the image.

An imaginary horizontal line through the center of the subject's eyes shall be located at approximately the 55% point of the vertical distance up from the bottom edge of the captured image.

For non-frontal pose, the subject shall satisfy these conditions when the head is rotated about an axis though the head and torso from the current pose back to center (zero angles) pose.

Visibility of Ears

The ear(s) shall be visible in frontal, profile and angled views for both "Head and Shoulders" and "Head Only" scene compositions. The hair shall be pushed back or tied behind the ears when appropriate.

From the 50/51 level description:

If hair covers the ears, then when possible, two photographs should be captured – one with hair in its normal state, and one with hair pulled back behind the ears.

Facial expression

The expression should be neutral (non-smiling) with both eyes open normally (i.e. not wide-open), and mouth closed. Every effort should be made to have supplied images conform with this specification. A smile with closed jaw is not recommended.

Eyeglasses

For subjects who normally wear eyeglasses, every effort should be made to capture the mugshots with the glasses on. If significant glare in the glasses is evident in the photograph, then a second frontal mugshot image should be captured of the subject without glasses. Specification of eyeglasses in the SXS field is required.

Eye patches

The wearing of eye patches is allowed only for medical reasons. In these cases, the specification of the patch, in the SXS field is required.

Background

The subject whose image is being captured shall be positioned in front of a background which is 18% gray with a plain smooth flat surface. A Kodak or other neutral gray card or densitometer shall be used to verify this 18% gray reflectance requirement.

The boundary between the head and the background should be clearly identifiable about the entire subject (very large volume hair excepted). There should be no shadows visible on the background behind the face image.

Photographic Requirements

Depth of field

The subject's captured facial image shall always be in focus from the nose to the ears. Although this may result in the background behind the subject being out of focus, this is not a problem[14]. It is recommended that auto-focus on the central part of face be used with digital camera photography.

Subject lighting

Lighting shall be equally distributed on the face. There shall be no significant direction of the light from the point of view of the photographer.

The region of the face, from the crown to the base of the chin, and from ear-to-ear, shall be clearly visible and free of shadows. In particular, there shall be no dark shadows in the eye-sockets due to the brow and the iris and pupil of the eyes shall be clearly visible.

Subject illumination can be accomplished using three point balanced illumination sources. A single bare “point” light source, such as a camera flash, is not acceptable for imaging.

[14] For optimum quality of the captured mugshot, the f-stop of the lens should be set at two f-stops below the maximum aperture opening when possible.

Appropriate diffusion techniques shall be employed to eliminate hot spots on the facial image. These hot spots usually appear on reflective areas such as cheeks and foreheads.

Background lighting

Proper lighting shall contribute to the uniformity of illumination of the background, and the background shall be free of shadows.

Exposure calibration

The exposure shall be keyed to the background. Several areas of the recorded 18% gray background shall be used to verify the proper exposure. The averages of the 8-bit Red, Green, and Blue (RGB) components within each area shall be calculated. Each of the RGB means shall fall between 105 and 125 with a standard deviation of plus or minus 10. Furthermore, for every area examined, the maximum difference between the means of any two of the RGB components shall not exceed 10.

No saturation

For each patch of skin on the person's face, the gradations in textures shall be clearly visible. In this sense, there will be no saturation (over or under exposure) on the face.

No unnatural color or "red-eye"

Unnaturally colored lighting (e.g. yellow, red) is not allowed. Care shall be taken to correct the "white balance" of image capture devices. The lighting shall produce a face image with natural looking flesh tones when viewed in typical examination environments. "Red-eye" is not acceptable.

No color or grayscale enhancement

A process that overexposes or under-develops a color or grayscale image for purposes of beauty enhancement or artistic pleasure is not allowed. The full spectrum shall be represented on the face image where appropriate. Teeth and whites of eyes shall be clearly light or white (when appropriate) and dark hair or features (when appropriate) shall be clearly dark.

No unnatural radial distortion of the camera lens, resulting in a diagonal angle of view of approximately 20 to 28 degrees

Fish eye effect, a type of distortion where central objects of the image erroneously appear closer than those at the edge, typically resulting in what appear to be unusually large noses in the image, is not allowed. While some distortion is almost always present during portrait photography, that distortion should not be noticeable by human examination.

For a typical photo capture system with a subject 1.5 to 2.5 meters from the camera, the focal length of the camera lens should be that of a medium telephoto lens. For 35 mm photography this means that the focal length should be between 90 mm and 130 mm. For other negative formats/sensors the recommended focal length is 2 to 3 times the diagonal of the negative/sensor

Digital Requirements

Pixel aspect ratio

Digital cameras and scanners used to capture facial images shall use square pixels with a pixel aspect ratio of 1:1

Image aspect ratio

The Width:Height (i.e., HLL:VLL) aspect ratio of the captured image shall be 3:4. This corresponds to commonly used format sizes such as 600 x 800, 768x1024, etc., allowing for a COTS digital camera to be used for capture.

No interlacing

Interlaced video frames are not allowed and all interlacing must be absent (not simply removed, but absent).

No digital zoom

The use of digital zoom (interpolation) to achieve specified resolution associated with Subject Application Profiles.

Image Compression

Non-frontal facial images shall be compressed using JPEG 2000 (JPEG is not allowed) meeting the maximum compression limits specified below.

There shall be one frontal facial image compressed using lossless JPEG 2000. If multiple frontal images are in the transaction, then one image must be compressed via lossless compression and the others can be compressed either using lossless JPEG 2000 or lossy JPEG 2000 that meets the maximum compression limits specified below. The best practice is to apply the lossless compression to the frontal image meeting the “Ears Visible” constraint.

The maximum compression ratio for both JPEG and JPEG 2000 of a rectangular region containing any exposed skin of the face, from crown to chin and ear to ear, shall be at most 15:1. This requirement is derived from studies of face algorithm matching at high and low resolutions. The non-facial portion of the mugshot, as well as the SMT Type-10 record, can be compressed up to a ratio of 120:1.

For JPEG, reference [14] provides source code to implement compression with both ROI and fixed compression ratios. For JPEG 2000, these capabilities are built into the implementation.

For both JPEG and JPEG 2000, care must be taken to account for automatic compression by camera hardware. Multiple compression stages can damage the quality of photographic data. When possible, minimum compression (highest resolutions) should be applied at the camera level when external software performs the final (15:1 or less) compression stage.

The table on the following page provides the the typical size of a single facial photograph using the compression recommendations contained in this section for levels 30 and 40, 50, and 51. . We assume that the image is formated as RGB888 (8 bits per color chanel per pixel). For levels 30 and 40, we also estimate that since the face width is 50% of the image width, then the area taken by the face is 25% of the total image area. SAP levels 50 and 51 include the constraint of lossless compression for the frontal pose facial image as discussed above.

Allowed color space

A full color image shall be captured. To ensure that color images exchanged between differing systems can be correctly displayed or printed, images shall be converted to the device-independent color space, *sRGB*.

Example File Sizes after compression

Level	Minimum WxH	Uncompressed Size (RGB888)	Size @ 2:1 Lossless Compression	Size @ 15:1 compression for the entire image	Size @ 15:1 compression for the face and 120:1 for the background
30	480x600	844 KB		58 KB	19.34 KB
40	768x1024	2.3 MB		156 KB	52.8 KB
50	3300x4400	42.5MB	14.2 MB		
51	2400x3200	22.5 MB	7.5 MB		

Format Requirements

Subject Pose (POS) and Subject pose angles (SPA)

One of either the POS or SPA fields shall be used to denote pose angles.

The POS field code values “F”, “R”, and “L” can be used for images in which the Pitch and Roll angles are 0 and the Yaw angle is 0, 90, and -90 respectively. (The sign of the Yaw angle in the previous sentence corresponds to the field 10.020 convention where a right profile is when the subject turns to the left).

The SPA field 10.025 can be used for the above poses and shall be used for all other angled poses. The POS field 10.020 shall then be of type code “D”, for determined 3D pose, instructing the user to use 10.025 as the reference for pose angles. (For example, a ¾ profile capture would require a POS field entry of “D” with the angle specified in the SPA field.)

In all cases, the uncertainty in the Yaw pose angle determination shall be less than 5 degrees of the frontal photograph, and 10 degrees in the non-frontal photographs. The uncertainty in the Pitch and Roll angles shall be less than 5 degrees.

Subject facial description (SXS)

The Subject facial description field shall be present in the transaction when one or more of the facial attributes given by the type codes of 10.026 is present in the image.

Subject hair color (SHC)

The Subject hair color field shall be present in the transaction. The code “UNSPECIFIED” for this field is not allowed.

Subject eye color (SEC)

The Subject eye color field shall be present in the transaction. The code “UNSPECIFIED” for this field is not allowed.

Annex J Face-Pose Values

(Informative)

The definition and range of pose angles

The Yaw and Roll angles shall be measured from the full face pose position and have a range of values from -180 degrees to +180 degrees. The Pitch angle shall have a range of values from -90 degrees to +90 degrees. The pose angle set is given by Tait-Bryan angles.

Yaw angle: rotation about the vertical (y) axis. A positive Yaw angle is used to express the angular offset as the subject rotates from a full-face pose to their left (approaching a right profile). A negative Yaw angle is used to express the angular offset as the subject rotates from a full-face pose to their right (approaching a left profile).

Pitch angle: rotation about the horizontal side-to-side (x) horizontal axis.

Roll angle: rotation about the horizontal back to front (z) axis.

The angles are defined relative to the frontal view of the subject, which has angles (0, 0, 0) as shown in Figure J1. Examples are shown in Figure J2.

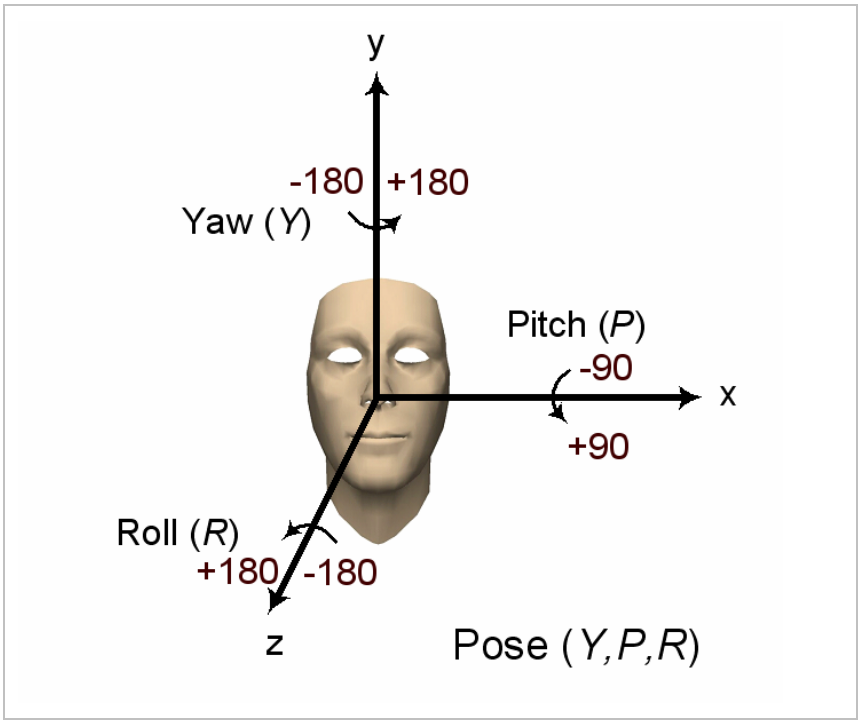

Figure J1 – The definition of pose angle set is with respect to the frontal view of the subject.

A B C d e f g

Figure J2 – Examples of pose angles and their encodings. The pose angles (Y, P, R) of Figures (a) – (g) are given by (0, 0, 0), (+45, 0, 0), (-45, 0, 0), (0, -45, 0), (0, +45, 0), (0, 0, -45), and (0, 0, +45), respectively.

The uncertainty in the pose angles is given by the range 0 to 90 inclusive. It shall denote approximately a maximum value of possible deviation in the measurement of the pose. This shall correspond to a two standard deviation confidence interval.

The encoding of angles is in ASCII format, with the minus sign "-" used to denote a negative value and the plus "+" sign optionally used to denote a positive value. Pose angle uncertainty angles always are positive.

The order of rotation through pose angles

As order of the successive rotation around the different axes does matter, the encoded rotation angle shall correspond to an order of execution starting from the frontal view. This order shall be given by Roll (about the front axis), then Pitch (about the horizontal axis) and finally Yaw (about the vertical axis). The (first executed) Roll transformation will therefore always be in the image (x, y) plane. Examples are shown in Figure J3.

From the point of view of executing a transformation from the observed view to a frontal view, the transformation order will therefore be Yaw, Pitch, and then Roll. Note however that the encoded angle is from the frontal view to the observed view.

(Y, P, R)=(0, 0, +45)	(Y, P, R)=(0,-30, +45)	(Y, P, R)=(-45, -30, +45)
A	**B**	**c**

(Y, P, R)=(0, 0, -30)	(Y, P, R)=(0, +20, -30)	(Y, P, R)=(-30, +20, -30)
D	**E**	**F**

Figure J3 – Examples of the order of rotation through pose angles with an origin of coordinate system at the nose tip. Figures (a)-(c) show three successive rotation steps to achieve the pose angles (Y, P, R) of (-45, -30, +45). Figures (d)-(f) show three successive rotation steps to achieve the pose angles (Y, P, R) of (-30, +20, -30).

Annex K Bibliography

(Informative)

AAMVA, Personal Identification – AAMVA International Specification – DL/ID Card Design, March 2005.

ANSI INCITS 379-2004, Iris Image Interchange Format.

ANSI INCITS 385-2004, Face Recognition Format for Data Interchange.

ISO/IEC 19794-5 Information technology - Biometric data interchange formats - Part 5: Face image data.

ISO/IEC 19794-6 Information technology - Biometric data interchange formats - Part 6: Iris image data.

NIST SP 800-76, Biometric Data Specification for Personal Identity Verification, February 2006.